1995 Ninja® ZX™-7 PARTS DIAGRAM

Chassis Electrical Equipment

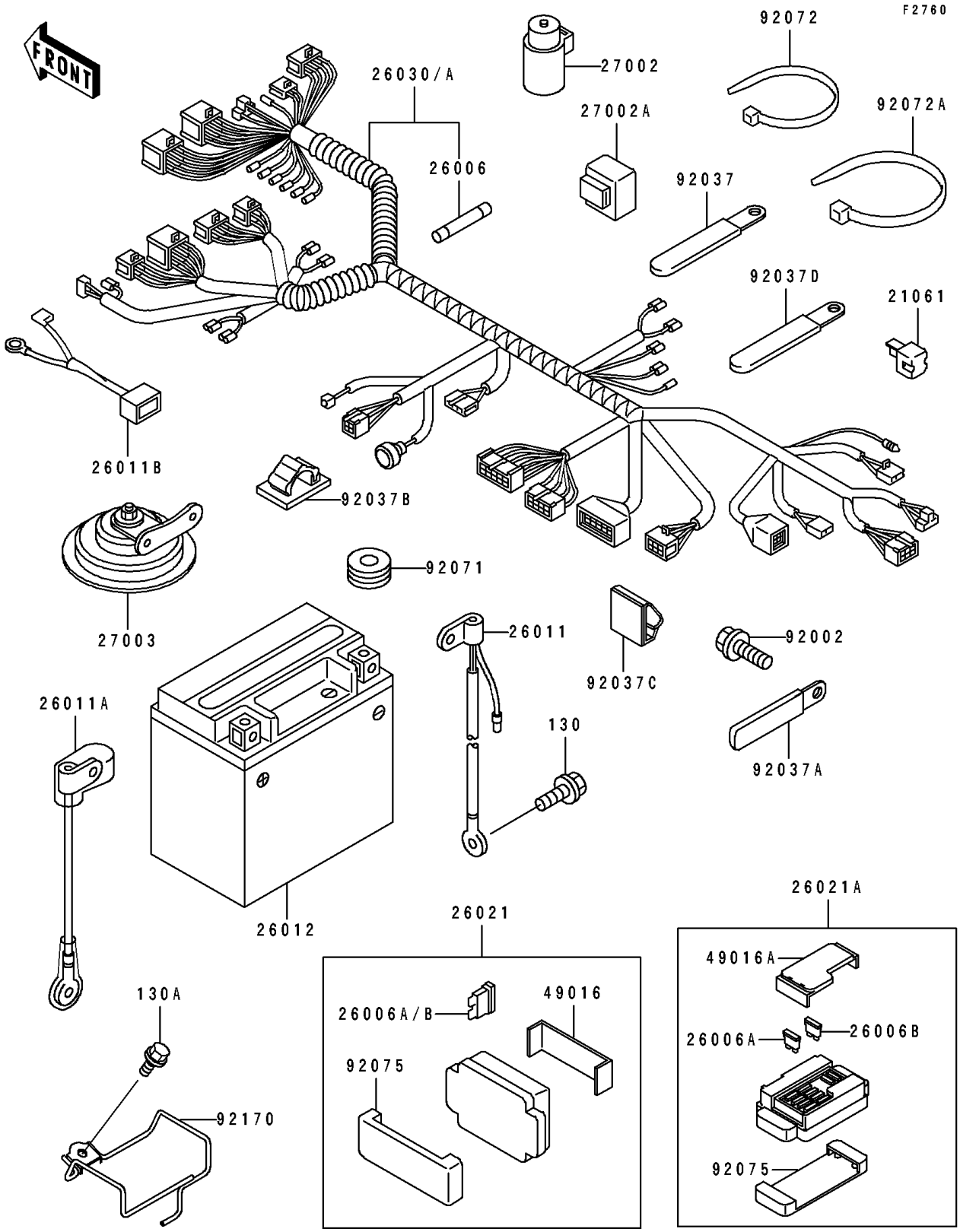

© 2025 Kawasaki Motors Corp., U.S.A.

1995 Ninja® ZX™-7 PARTS LIST

Chassis Electrical Equipment

ITEM NAME	PART NUMBER	QUANTITY
FUSE,20A,L=30 (Ref # 26006)	26006-1056	2
FUSE,30A-G (Ref # 26006A)	26006-1067	1
FUSE,10A-R (Ref # 26006B)	26006-1068	8
WIRE-LEAD,BATTERY(-) (Ref # 26011)	26011-1429	1
WIRE-LEAD,BATTERY(+) (Ref # 26011A)	26011-1475	1
WIRE-LEAD,THERMO SENSOR (Ref # 26011B)	26011-1507	1
BATTERY,YTX12-BS,12V 10AH (Ref # 26012)	26012-1281	1
JUNCTION BOX (Ref # 26021A)	26021-1089	1
HARNESS,MAIN (Ref # 26030A)	26030-1333	1
RELAY-ASSY (Ref # 27002)	27002-1051	2
RELAY-ASSY,TURN SIGNAL (Ref # 27002A)	27002-1059	1
HORN (Ref # 27003)	27003-1316	1
COVER-SEAL,FUSE (Ref # 49016A)	49016-1177	1
BOLT,TAPPING,5X16 (Ref # 92002)	92002-1472	2
CLAMP,WIRING HARNESS (Ref # 92037)	92037-1539	1
CLAMP (Ref # 92037A)	92037-1679	2
CLAMP,HARNESS (Ref # 92037B)	92037-1816	1
CLAMP,WIRING HARNESS (Ref # 92037C)	92037-1954	2
CLAMP (Ref # 92037D)	92037-1993	5
GROMMET,SENSOR LEAD (Ref # 92071)	92071-1058	1
BAND,L=185 (Ref # 92072)	92072-1195	6
BAND,L=365 (Ref # 92072A)	92072-1197	4
DAMPER,JUNCTION BOX (Ref # 92075)	92075-1688	1
CLAMP,HARNESS (Ref # 92170)	92170-1375	1
BOLT-FLANGED,6X10 (Ref # 130)	130G0610	1
BOLT-FLANGED (Ref # 130A)	130J0612	1

© 2025 Kawasaki Motors Corp., U.S.A.