1994 Ninja® ZX™-7 PARTS DIAGRAM

Seat

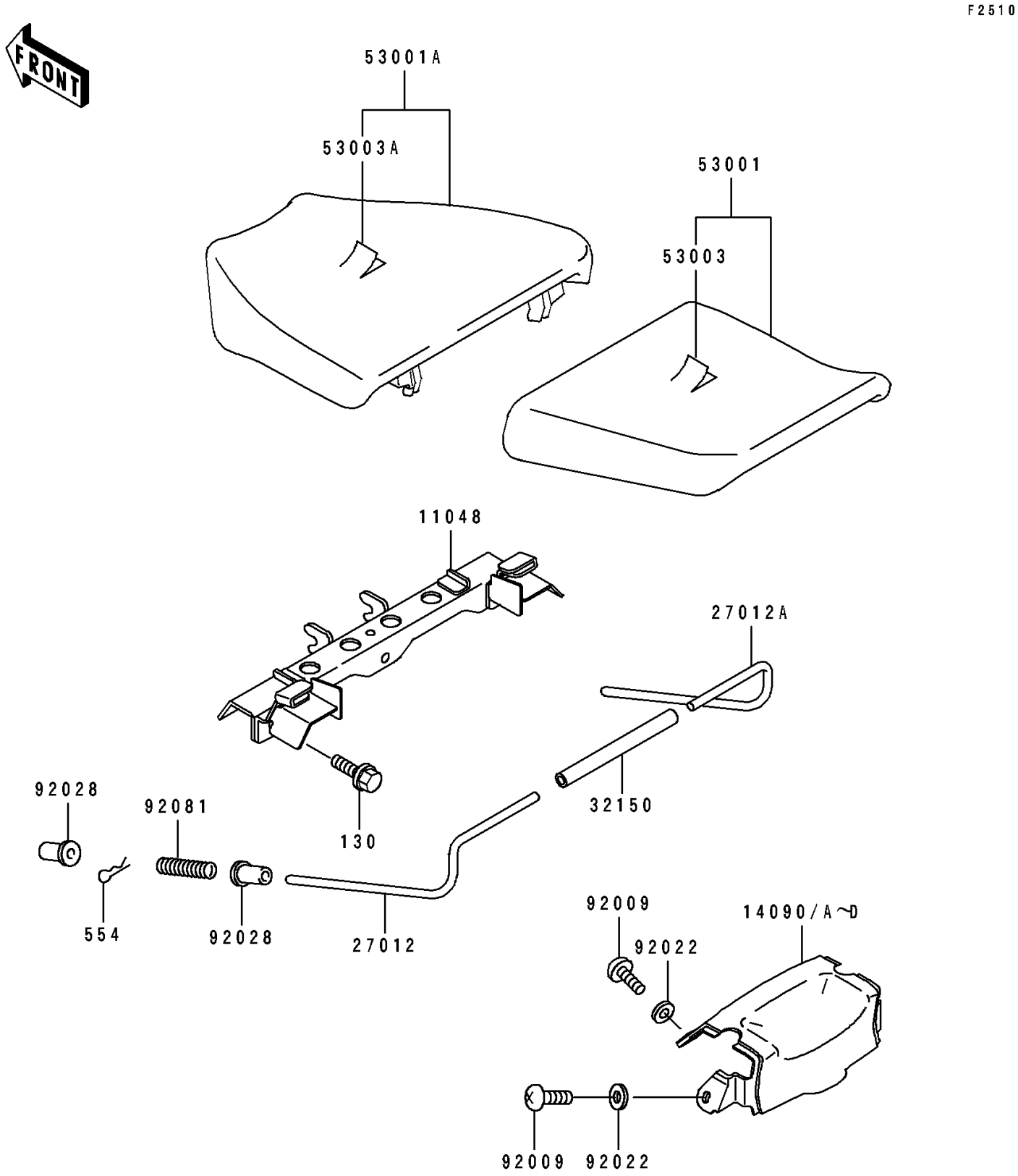

© 2024 Kawasaki Motors Corp., U.S.A.

1994 Ninja® ZX™-7 PARTS LIST

Seat

ITEM NAME	PART NUMBER	QUANTITY

© 2024 Kawasaki Motors Corp., U.S.A.