1995 Ninja® ZX™-7 PARTS DIAGRAM

Shock Absorber(s)

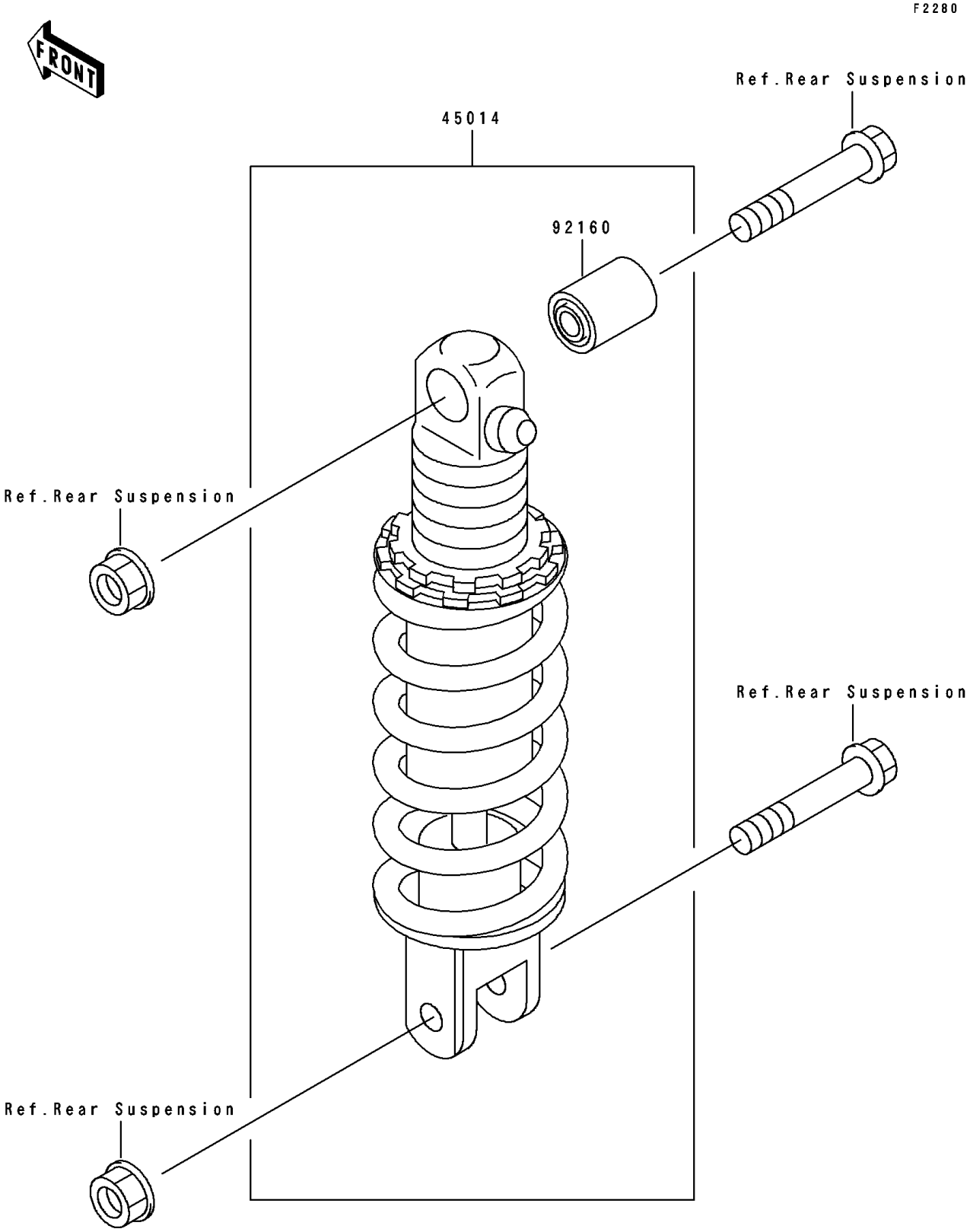

© 2025 Kawasaki Motors Corp., U.S.A.

1995 Ninja® ZX™-7 PARTS LIST

Shock Absorber(s)

ITEM NAME	PART NUMBER	QUANTITY
SHOCKABSORBER (Ref # 45014)	45014-1557	1
DAMPER,SHOCKABSORBER (Ref # 92160)	92160-1161	1

© 2025 Kawasaki Motors Corp., U.S.A.