1995 Ninja® ZX™-7 PARTS DIAGRAM

Brake Pedal/Torque Link

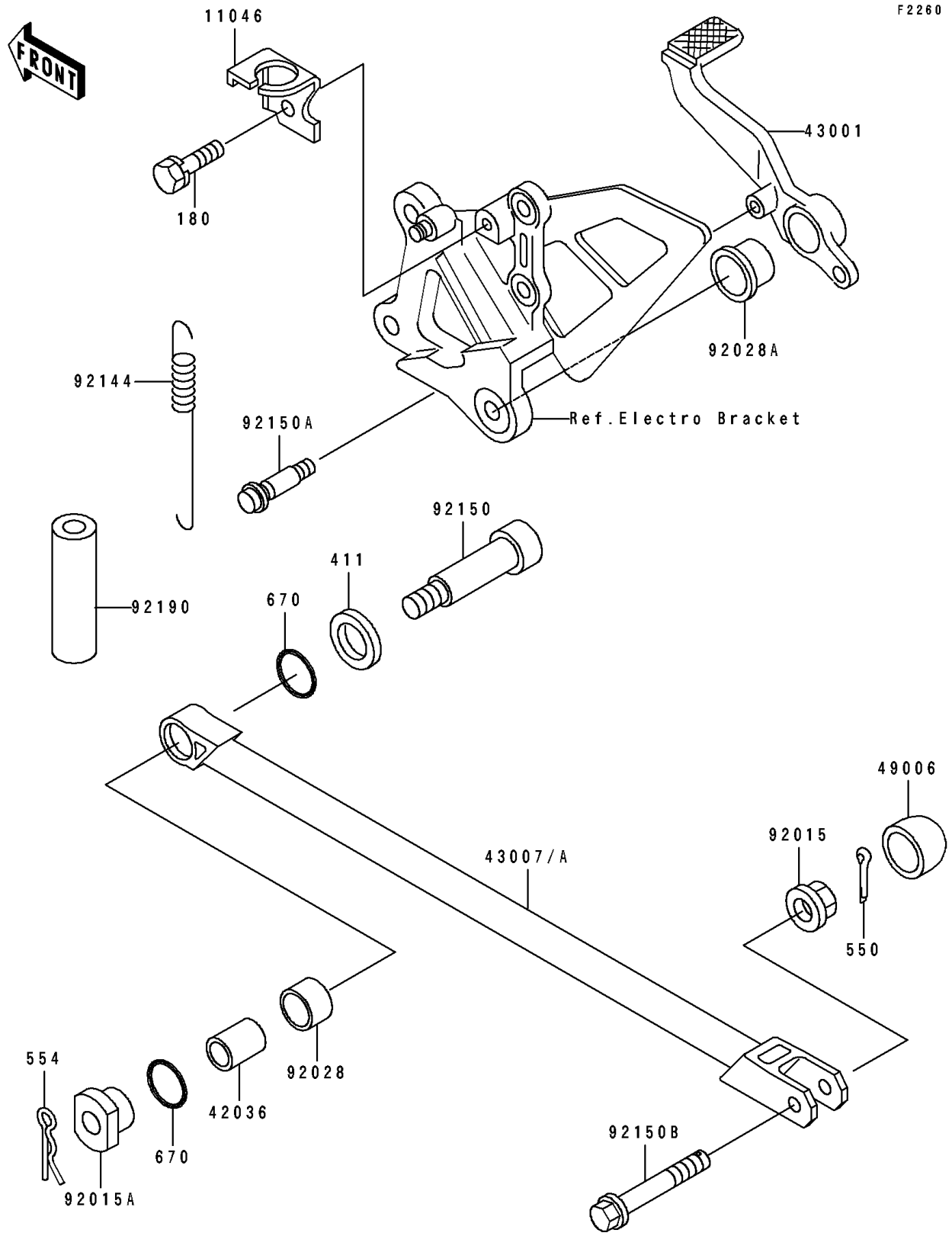

© 2025 Kawasaki Motors Corp., U.S.A.

1995 Ninja® ZX™-7 PARTS LIST

Brake Pedal/Torque Link

ITEM NAME	PART NUMBER	QUANTITY
BRACKET,REAR BRAKE SWITCH (Ref # 11046)	11046-1252	1
SLEEVE,10.1X16X20 (Ref # 42036)	42036-1242	1
LEVER-BRAKE,PEDAL (Ref # 43001)	43001-1274	1
ROD-TORQUE,SILVER NO.30 (Ref # 43007)	43007-1166-KF	1
BOOT (Ref # 49006)	49006-1218	1
NUT,8MM (Ref # 92015)	92015-1432	1
NUT,8MM (Ref # 92015A)	92015-1747	1
BUSHING (Ref # 92028)	92028-1468	1
BUSHING (Ref # 92028A)	92028-1576	1
SPRING,BRAKE PEDAL RETURN (Ref # 92144)	92144-1421	1
BOLT,SOCKET,8X61 (Ref # 92150)	92150-1167	1
BOLT (Ref # 92150A)	92150-1439	1
BOLT,FLANGED,8X47 (Ref # 92150B)	92150-1539	1
TUBE (Ref # 92190)	92190-1170	1
BOLT-UPSET-WS (Ref # 180)	180H0614	1
WASHER-PLAIN,10MM (Ref # 411)	411D1000	1
PIN-COTTER,2.0X15 (Ref # 550)	550D2015	1
PIN-SNAP,8MM (Ref # 554)	554A0800	1
O RING,16MM (Ref # 670)	670B2016	2

© 2025 Kawasaki Motors Corp., U.S.A.