1995 Ninja® ZX™-7 PARTS DIAGRAM

Stand(s)

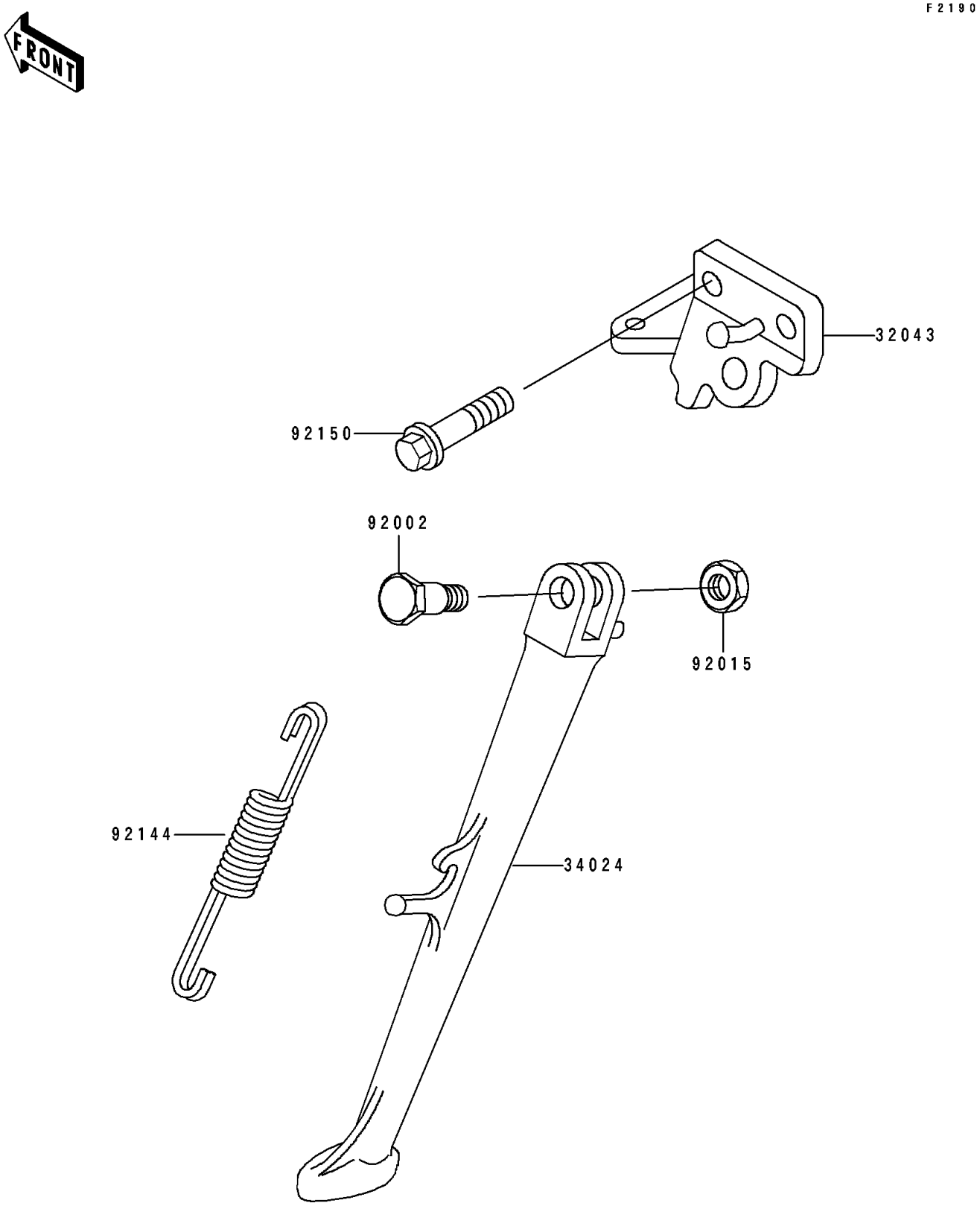

© 2025 Kawasaki Motors Corp., U.S.A.

1995 Ninja® ZX™-7 PARTS LIST

Stand(s)

ITEM NAME	PART NUMBER	QUANTITY
BRACKET-STAND,SIDE (Ref # 32043)	32043-1342	1
STAND-SIDE (Ref # 34024)	34024-1276	1
BOLT,SIDE STAND (Ref # 92002)	92002-1813	1
NUT,LOCK,10MM,BLACK (Ref # 92015)	92015-1188	1
SPRING,SIDE STAND (Ref # 92144)	92144-1127	1
BOLT,FLANGED,10X35 (Ref # 92150)	92150-1353	2

© 2025 Kawasaki Motors Corp., U.S.A.