1995 Ninja® ZX™-7 PARTS DIAGRAM

Swingarm

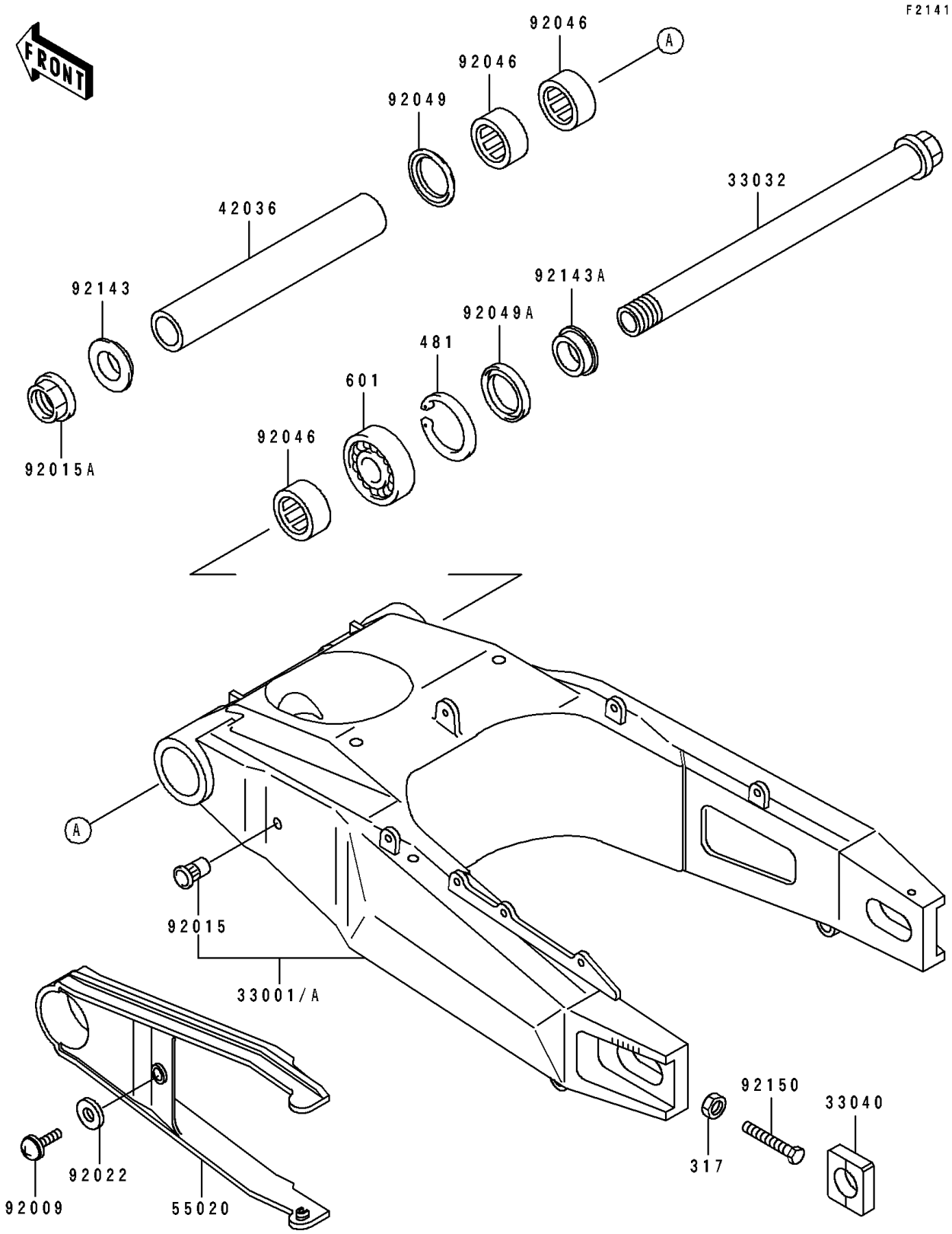

© 2025 Kawasaki Motors Corp., U.S.A.

1995 Ninja® ZX™-7 PARTS LIST

Swingarm

ITEM NAME	PART NUMBER	QUANTITY
ARM-COMP-SWING,SILVER NO.30 (Ref # 33001)	33001-1411-KF	1
SHAFT-SWING ARM (Ref # 33032)	33032-1164	1
ADJUSTER-CHAIN (Ref # 33040)	33040-1114	2
SLEEVE,SWING ARM,L=228 (Ref # 42036)	42036-1284	1
GUARD,DRIVE CHAIN (Ref # 55020)	55020-1450	1
SCREW,6X18 (Ref # 92009)	92009-1663	1
NUT,POP,6MM,L=16.5 (Ref # 92015)	92015-1792	1
NUT,FLANGED,25MM (Ref # 92015A)	92015-1845	1
WASHER,6.5X16X1 (Ref # 92022)	92022-1143	1
BEARING-NEEDLE,BM3520 (Ref # 92046)	92046-1205	3
SEAL-OIL,MHA 35 42 5.7F (Ref # 92049)	92049-1380	1
SEAL-OIL,MHA 35 47 5 (Ref # 92049A)	92049-1381	1
COLLAR,SWING ARM,LH,L=11.5 (Ref # 92143)	92143-1480	1
COLLAR,SWING ARM,RH,L=12.5 (Ref # 92143A)	92143-1481	1
BOLT,8X55 (Ref # 92150)	92150-1350	2
NUT-HEX-SMALL,8MM (Ref # 317)	317G0800	2
CIRCLIP-TYPE-C,47MM (Ref # 481)	481J4700	1
BEARING-BALL,#6005U (Ref # 601)	601B6005U	1

© 2025 Kawasaki Motors Corp., U.S.A.