# 1995 Ninja® ZX™-7 PARTS DIAGRAM

## Electro Bracket

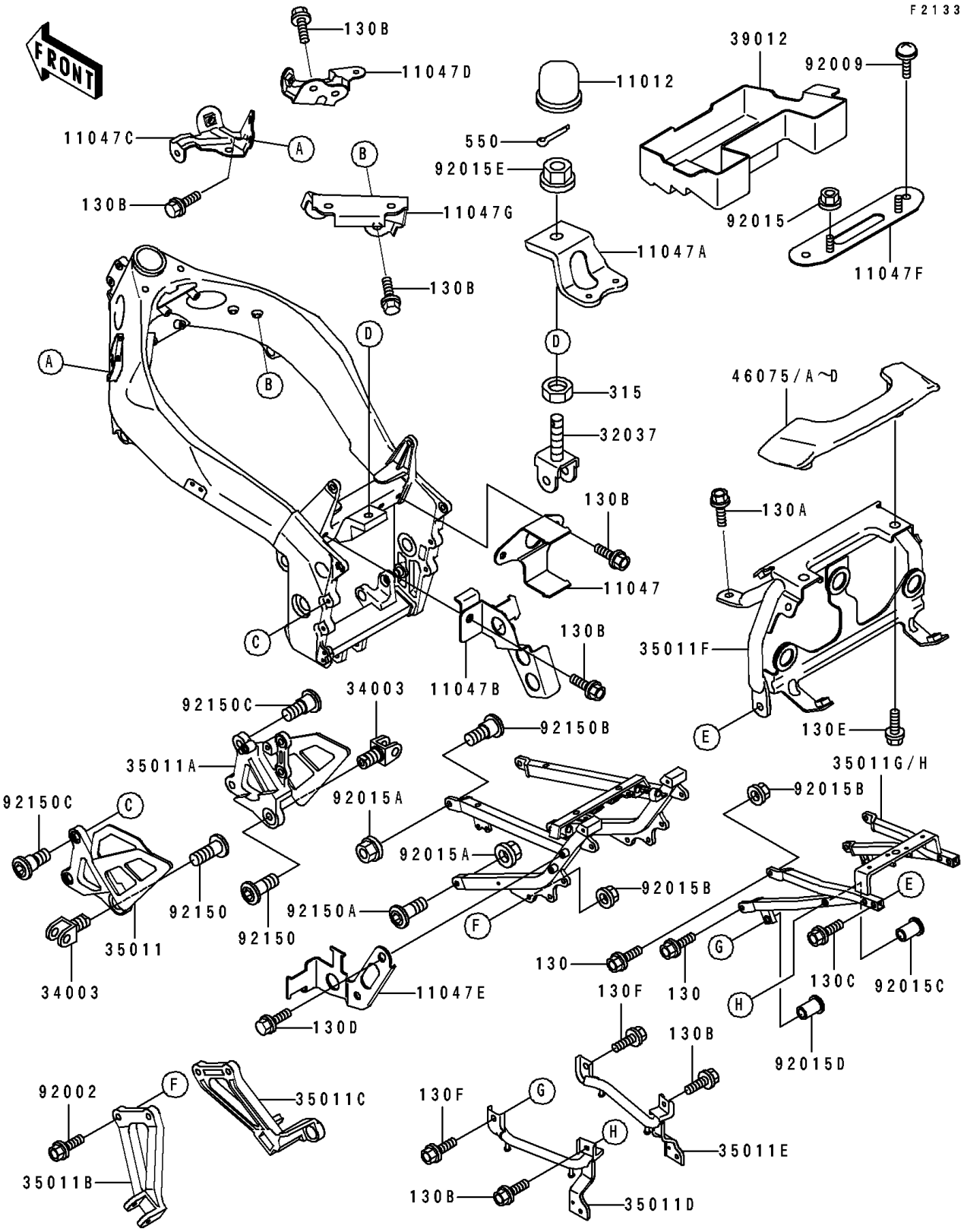


© 2025 Kawasaki Motors Corp., U.S.A.

# 1995 Ninja® ZX™-7 PARTS LIST

Electro Bracket

| ITEM NAME | PART NUMBER | QUANTITY |
|---|---|---|
| CAP (Ref # 11012) | 11012-1844 | 1 |
| BRACKET,FUEL PUMP (Ref # 11047) | 11047-1265 | 1 |
| BRACKET,BATTERY (Ref # 11047A) | 11047-1267 | 1 |
| BRACKET,FUEL FILTER (Ref # 11047B) | 11047-1852 | 1 |
| BRACKET,RADIATOR,LH (Ref # 11047C) | 11047-1853 | 1 |
| BRACKET,RADIATOR,RH (Ref # 11047D) | 11047-1854 | 1 |
| BRACKET,RELAY&SEAT LOCK (Ref # 11047E) | 11047-1855 | 1 |
| BRACKET,IGNITER (Ref # 11047F) | 11047-1858 | 1 |
| BRACKET (Ref # 11047G) | 11047-1967 | 1 |
| BRACKET-SHOCKABSORBER (Ref # 32037) | 32037-1564 | 1 |
| HOLDER-STEP (Ref # 34003) | 34003-1327 | 2 |
| STAY,FR,LH (Ref # 35011) | 35011-1552 | 1 |
| STAY,FR,RH (Ref # 35011A) | 35011-1553 | 1 |
| STAY,RR,LH (Ref # 35011B) | 35011-1554 | 1 |
| STAY,RR,RH (Ref # 35011C) | 35011-1555 | 1 |
| STAY,REAR GRIP,LH (Ref # 35011D) | 35011-1559 | 1 |
| STAY,REAR GRIP,RH (Ref # 35011E) | 35011-1560 | 1 |
| STAY,TAIL LAMP (Ref # 35011F) | 35011-1628 | 1 |
| STAY,REAR FRAME,SILVER NO.30 (Ref # 35011G) | 35011-1632-KF | 1 |
| CASE-STORAGE (Ref # 39012) | 39012-1056 | 1 |
| GRIP,GRABRAIL,P.A.WHITE (Ref # 46075C) | 46075-1100-R1 | 1 |
| GRIP,GRABRAIL,BLACK MICA (Ref # 46075D) | 46075-1100-20 | 1 |
| BOLT,FLANGED,8X30 (Ref # 92002) | 92002-1445 | 4 |
| SCREW,6X14 (Ref # 92009) | 92009-1662 | 2 |
| NUT,FLANGED,6MM (Ref # 92015) | 92015-1367 | 2 |
| NUT,FLANGED,10MM (Ref # 92015A) | 92015-1387 | 4 |
| NUT,FLANGED,8MM (Ref # 92015B) | 92015-1406 | 8 |
| NUT,POP,6MM,L=15 (Ref # 92015C) | 92015-1791 | 2 |
| NUT,POP,8MM,L=18 (Ref # 92015D) | 92015-1794 | 2 |

© 2025 Kawasaki Motors Corp., U.S.A.

# 1995 Ninja® ZX™-7 PARTS LIST

## Electro Bracket

| ITEM NAME | PART NUMBER | QUANTITY |
|---|---|---|
| NUT,FLANGED,16MM (Ref # 92015E) | 92015-1881 | 1 |
| BOLT,SOCKET,10X25 (Ref # 92150) | 92150-1268 | 2 |
| BOLT,10X35 (Ref # 92150A) | 92150-1295 | 2 |
| BOLT,SOCKET,10X30 (Ref # 92150B) | 92150-1517 | 2 |
| BOLT,SOCKET,8X20 (Ref # 92150C) | 92150-1839 | 4 |
| BOLT-FLANGED,8X25 (Ref # 130) | 130H0825 | 4 |
| BOLT-FLANGED,6X14,BLACK (Ref # 130A) | 130J0614 | 2 |
| BOLT-FLANGED,6X16,BLACK (Ref # 130B) | 130J0616 | 11 |
| BOLT-FLANGED,6X35 (Ref # 130C) | 130J0635 | 2 |
| BOLT-FLANGED,6X55,BLACK (Ref # 130D) | 130J0655 | 2 |
| BOLT-FLANGED,8X16,BLACK (Ref # 130E) | 130J0816 | 2 |
| BOLT-FLANGED,8X20 (Ref # 130F) | 130J0820 | 2 |
| NUT-HEX-FINE,16MM (Ref # 315) | 315B1600 | 1 |
| PIN-COTTER,4.0X25 (Ref # 550) | 550D4025 | 1 |

© 2025 Kawasaki Motors Corp., U.S.A.