1995 Ninja® ZX™-7 PARTS DIAGRAM

Oil Cooler

E3034

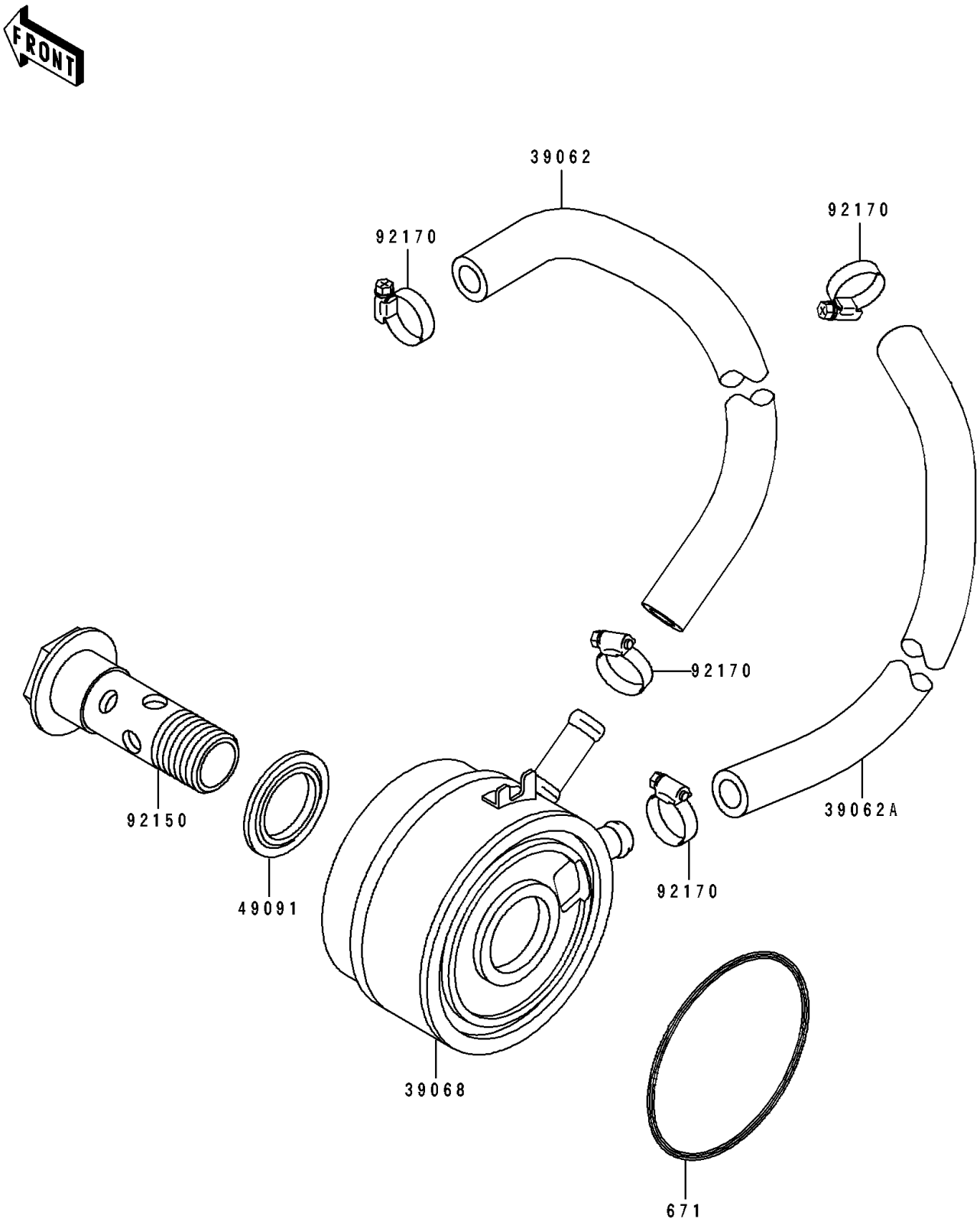

© 2025 Kawasaki Motors Corp., U.S.A.

1995 Ninja® ZX™-7 PARTS LIST

Oil Cooler

ITEM NAME	PART NUMBER	QUANTITY
HOSE-COOLING,FITTING-COOLER (Ref # 39062)	39062-1440	1
HOSE-COOLING,COOLER-RADIATOR (Ref # 39062A)	39062-1441	1
COOLER-ASSY-OIL (Ref # 39068)	39068-1055	1
WASHER-SEAL (Ref # 49091)	49091-1052	1
BOLT,OIL COOLER (Ref # 92150)	92150-1466	1
CLAMP,COOLING HOSE (Ref # 92170)	92170-1287	4
O RING,65MM (Ref # 671)	671B2565	1

© 2025 Kawasaki Motors Corp., U.S.A.