1995 Ninja® ZX™-7 PARTS DIAGRAM

Crankcase Bolt Pattern

E1412

Upper Case

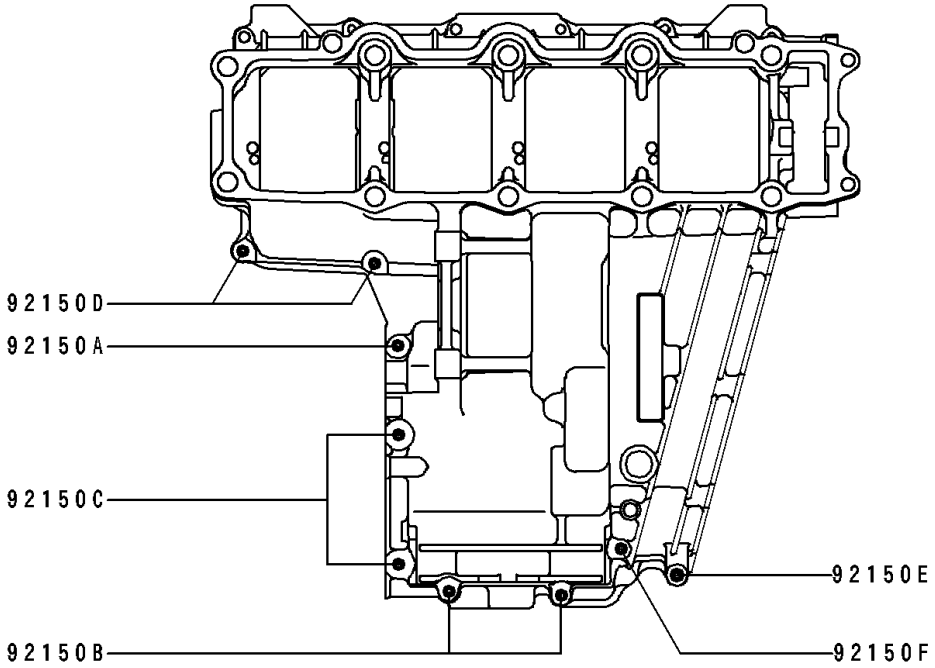

Lower Case

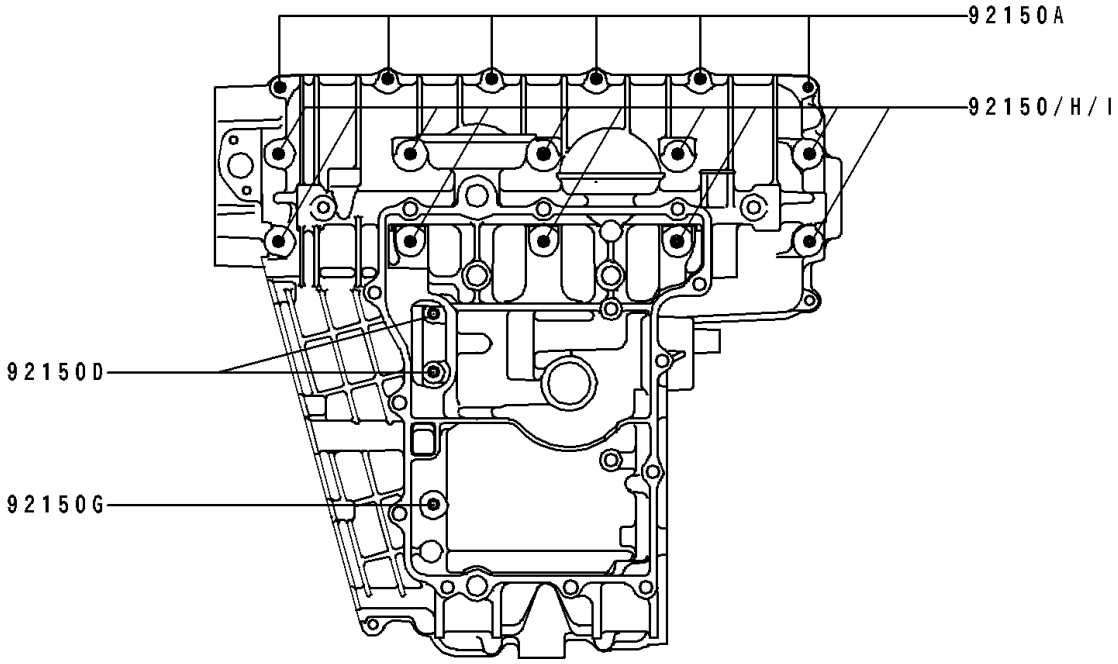

© 2025 Kawasaki Motors Corp., U.S.A.

1995 Ninja® ZX™-7 PARTS LIST

Crankcase Bolt Pattern

ITEM NAME	PART NUMBER	QUANTITY
BOLT,6X38 (Ref # 92150A)	92150-1301	7
BOLT,6X105 (Ref # 92150B)	92150-1464	2
BOLT,8X70 (Ref # 92150C)	92150-1483	2
BOLT,6X35 (Ref # 92150D)	92150-1547	4
BOLT,6X60 (Ref # 92150E)	92150-1548	1
BOLT,6X70 (Ref # 92150F)	92150-1549	1
BOLT,8X115 (Ref # 92150G)	92150-1550	1
BOLT,9X95 (Ref # 92150H)	92150-1759	10

© 2025 Kawasaki Motors Corp., U.S.A.