# 1995 Ninja® ZX™-7 PARTS DIAGRAM

## Gear Change Drum/Shift Fork(s)

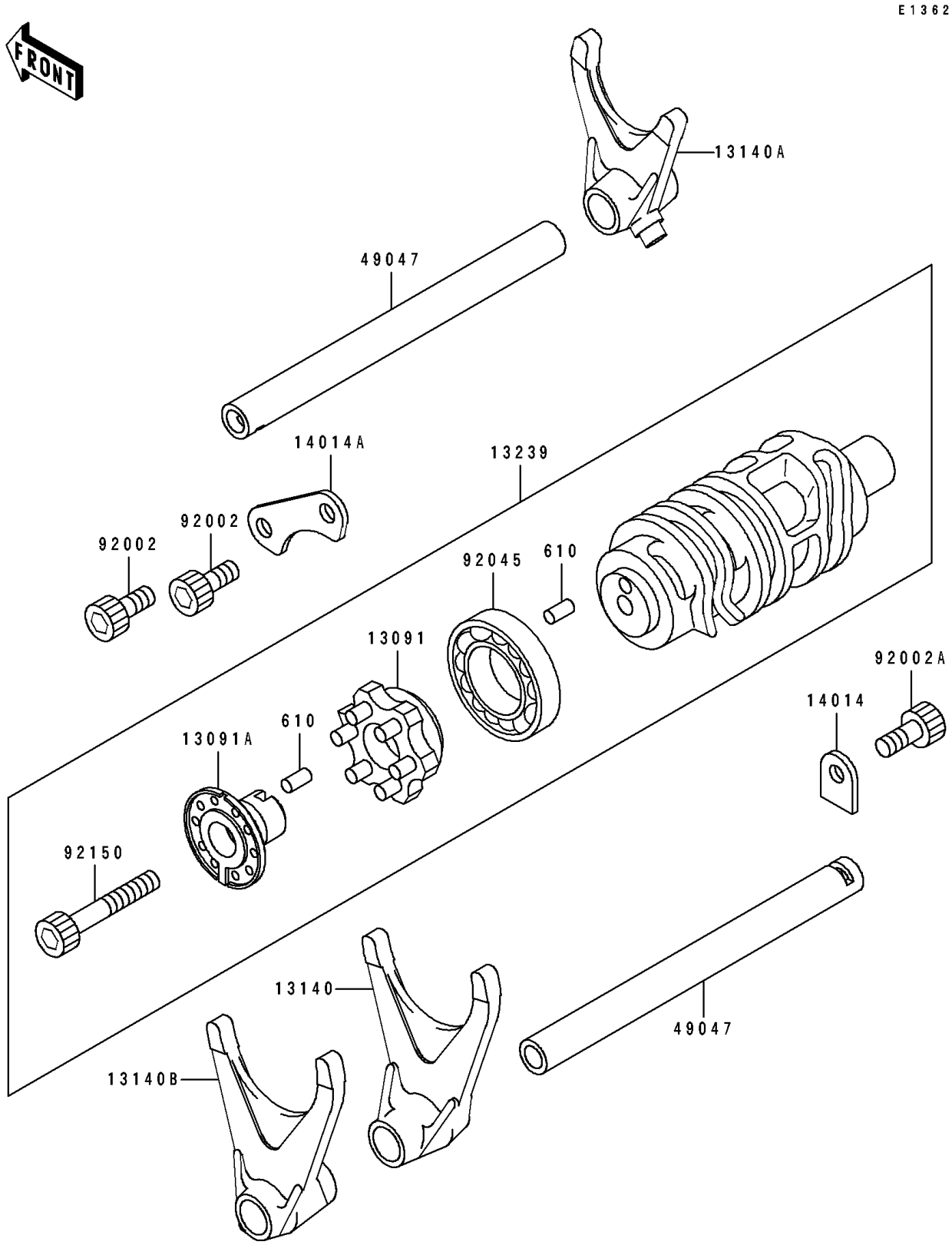


© 2025 Kawasaki Motors Corp., U.S.A.

# 1995 Ninja® ZX™-7 PARTS LIST

Gear Change Drum/Shift Fork(s)

| ITEM NAME | PART NUMBER | QUANTITY |
|---|---|---|
| HOLDER,CHANGE DRUM (Ref # 13091) | 13091-1722 | 1 |
| HOLDER,CHANGE DRUM (Ref # 13091A) | 13091-1723 | 1 |
| FORK-SHIFT,OUTPUT,TOP (Ref # 13140) | 13140-1199 | 1 |
| FORK-SHIFT,INPUT,3RD&4TH (Ref # 13140A) | 13140-1200 | 1 |
| FORK-SHIFT,OUTPUT,5TH (Ref # 13140B) | 13140-1201 | 1 |
| DRUM-ASSY-CHANGE (Ref # 13239) | 13239-1168 | 1 |
| PLATE-POSITION,ROD (Ref # 14014) | 14014-1080 | 1 |
| PLATE-POSITION (Ref # 14014A) | 14014-1104 | 1 |
| ROD-SHIFT (Ref # 49047) | 49047-1082 | 2 |
| BOLT,SOCKET,6X14 (Ref # 92002) | 92002-1192 | 2 |
| BOLT,SOCKET,6X12 (Ref # 92002A) | 92002-1796 | 1 |
| BEARING-BALL,16005(NTN) (Ref # 92045) | 92045-1045 | 1 |
| BOLT,SOCKET,6X35 (Ref # 92150) | 92150-1484 | 1 |
| ROLLER,4X8 (Ref # 610) | 610A0408 | 2 |

© 2025 Kawasaki Motors Corp., U.S.A.