1992 Ninja® ZX™-7R PARTS DIAGRAM

Electrical Equipment

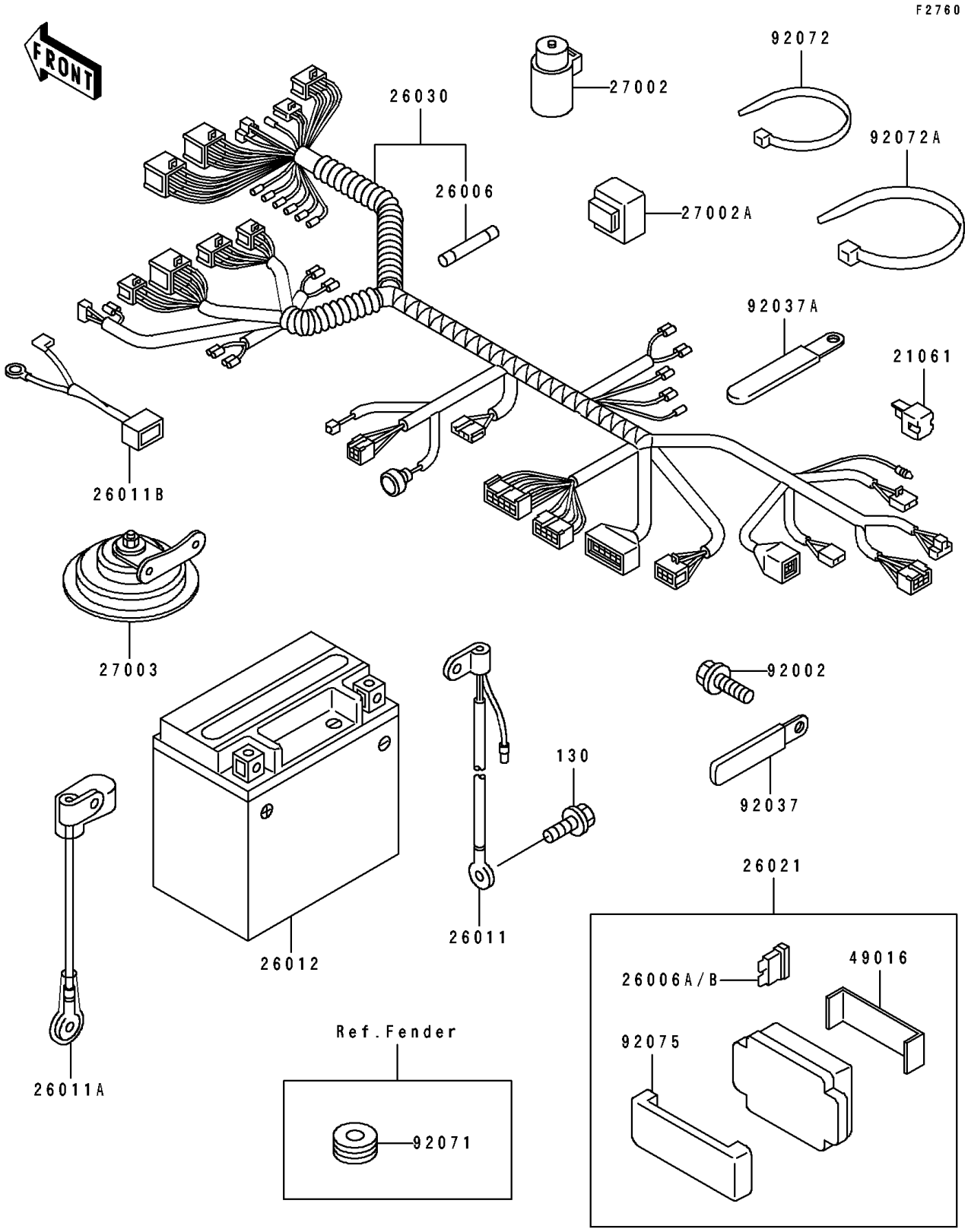

© 2024 Kawasaki Motors Corp., U.S.A.

1992 Ninja® ZX™-7R PARTS LIST

Electrical Equipment

ITEM NAME	PART NUMBER	QUANTITY
RECTIFIER (Ref # 21061)	21061-1003	1
FUSE,20A,L=30 (Ref # 26006)	26006-1056	2
FUSE,30A-G (Ref # 26006A)	26006-1067	1
FUSE,10A-R (Ref # 26006B)	26006-1068	5
WIRE-LEAD,BATTERY GROUND (Ref # 26011)	26011-1195	1
WIRE-LEAD,BATTERY(+) (Ref # 26011A)	26011-1475	1
WIRE-LEAD,THERMO SENSOR (Ref # 26011B)	26011-1507	1
BATTERY,YTX9-BS,12V 8AH (Ref # 26012)	26012-1261	1
JUNCTION BOX (Ref # 26021)	26021-1077	1
HARNESS,MAIN (Ref # 26030)	26030-1084	1
RELAY-ASSY (Ref # 27002)	27002-1051	2
RELAY-ASSY,TURN SIGNAL (Ref # 27002A)	27002-1059	1
HORN (Ref # 27003)	27003-1316	1
COVER-SEAL,FUSE (Ref # 49016)	49016-1125	1
BOLT,TAPPING,5X16 (Ref # 92002)	92002-1472	2
CLAMP (Ref # 92037)	92037-1679	2
CLAMP (Ref # 92037A)	92037-1993	5
GROMMET,SENSOR LEAD (Ref # 92071)	92071-1058	1
BAND,L=185 (Ref # 92072)	92072-1195	4
BAND,L=365 (Ref # 92072A)	92072-1197	2
DAMPER,JUNCTION BOX (Ref # 92075)	92075-1688	1
BOLT-FLANGED,6X10 (Ref # 130)	130B0610	1

© 2024 Kawasaki Motors Corp., U.S.A.