2026 KLX®110R

PARTS DIAGRAM

Oil Pump

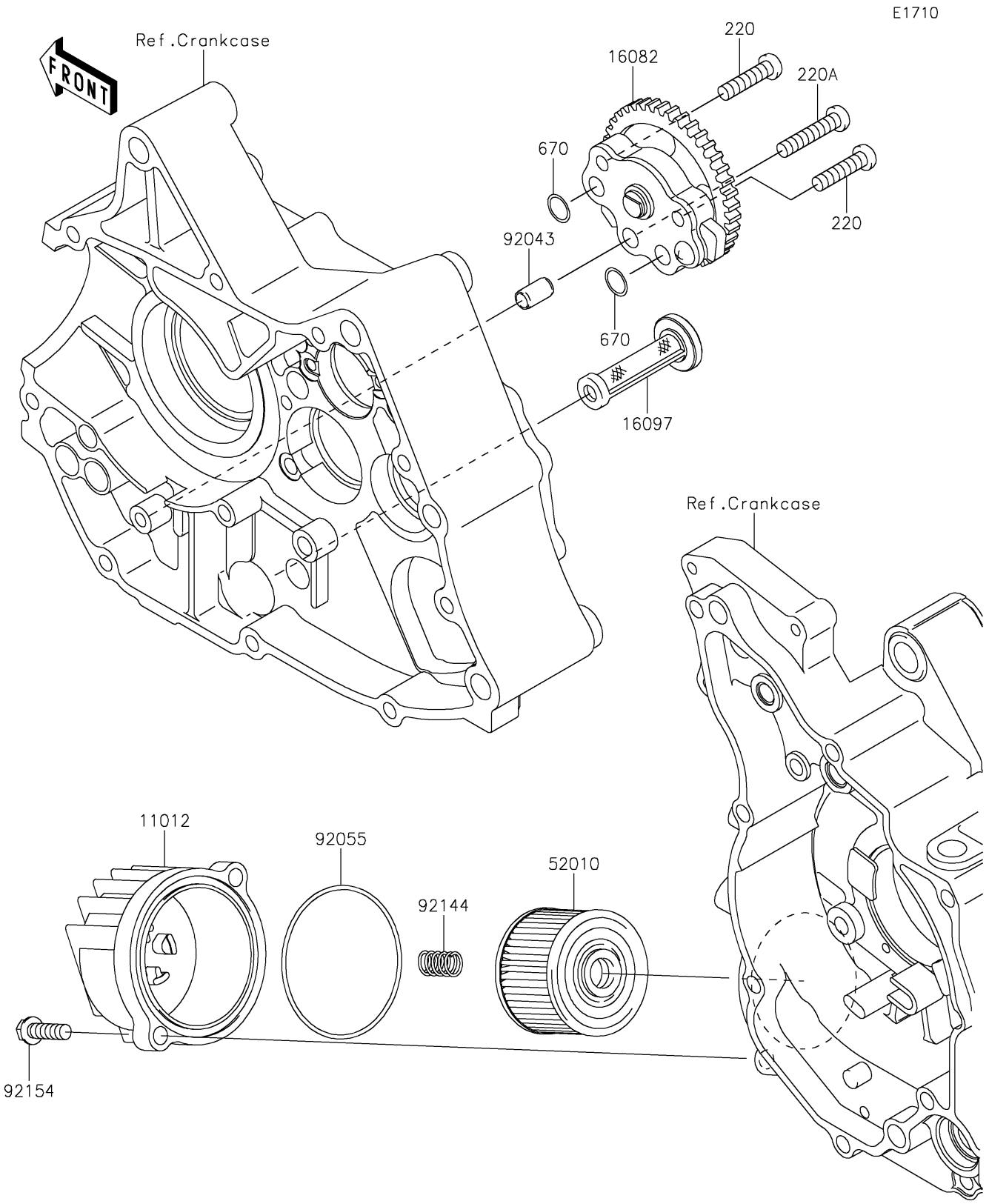

© 2026 Kawasaki Motors Corp., U.S.A.

2026 KLX®110R

PARTS LIST

Oil Pump

ITEM NAME	PART NUMBER	QUANTITY
CAP (Ref # 11012)	11012-1980	1
PUMP-ASSY-OIL (Ref # 16082)	16082-0010	1
FILTER-ASSY-OIL (Ref # 16097)	16097-1071	1
ELEMENT-OIL FILTER (Ref # 52010)	52010-0552	1
PIN,6.2X8X14 (Ref # 92043)	92043-1741	1
RING-O,59.6X2.4 (Ref # 92055)	92055-3018	1
SPRING (Ref # 92144)	92144-1892	1
BOLT,FLANGED,6X20 (Ref # 92154)	92154-7209	2
SCREW-PAN-CROS,6X25 (Ref # 220)	220AA0625	2
SCREW-PAN-CROS,6X30 (Ref # 220A)	220AA0630	1
O RING,9.8X1.9 (Ref # 670)	670B1510	2

© 2026 Kawasaki Motors Corp., U.S.A.