2024 JET SKI® ULTRA® 310LX-S

PARTS DIAGRAM

Oil Pan

E1434

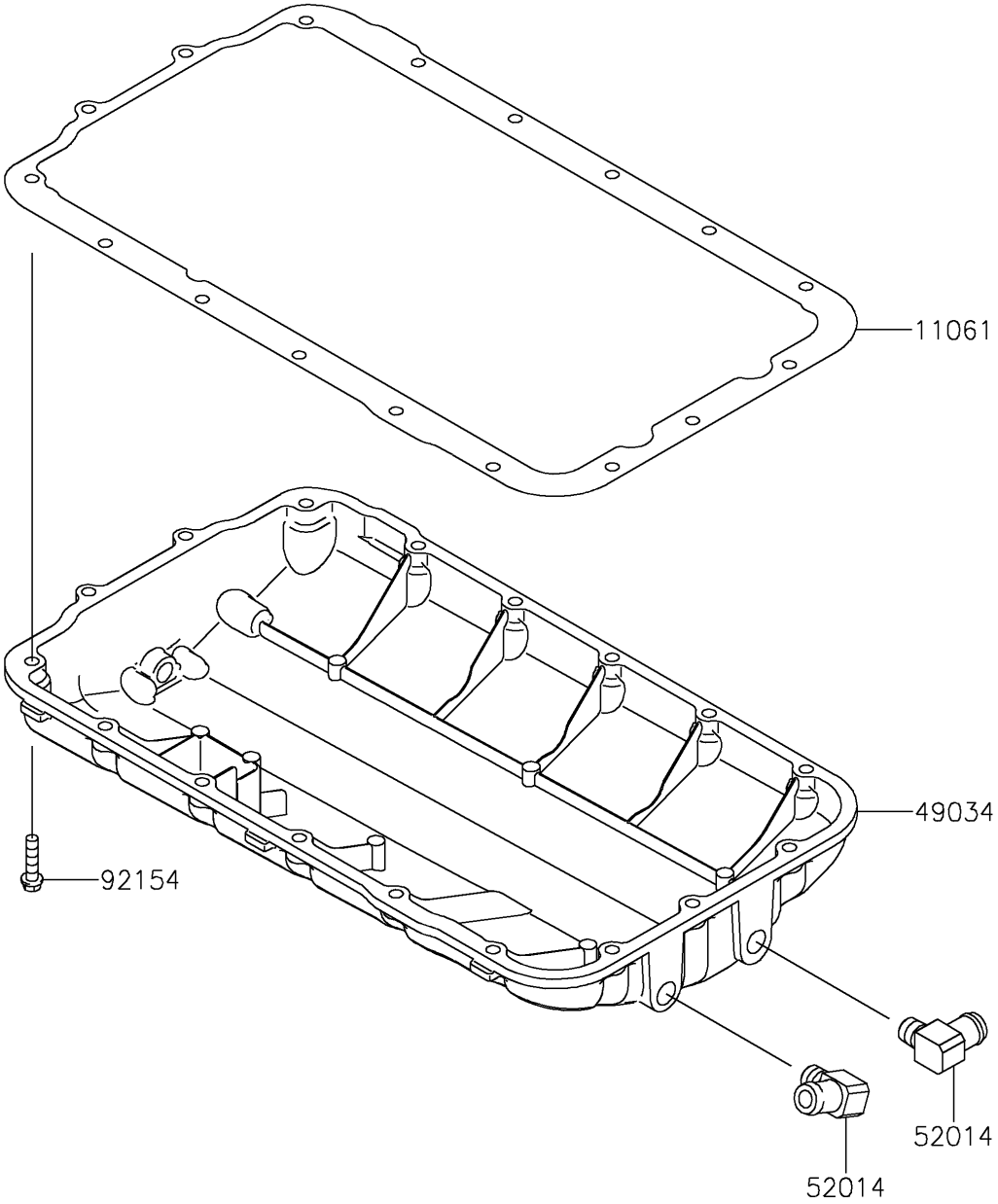

© 2026 Kawasaki Motors Corp., U.S.A.

2024 JET SKI® ULTRA® 310LX-S

PARTS LIST

Oil Pan

ITEM NAME	PART NUMBER	QUANTITY
GASKET,OIL PAN (Ref # 11061)	11061-3710	1
PAN-OIL (Ref # 49034)	49034-3702	1
ELBOW (Ref # 52014)	52014-3717	2
BOLT,FLANGED,6X25 (Ref # 92154)	92154-0823	17

© 2026 Kawasaki Motors Corp., U.S.A.