1989 Ninja® 750R PARTS DIAGRAM

Decals

F2861-0031

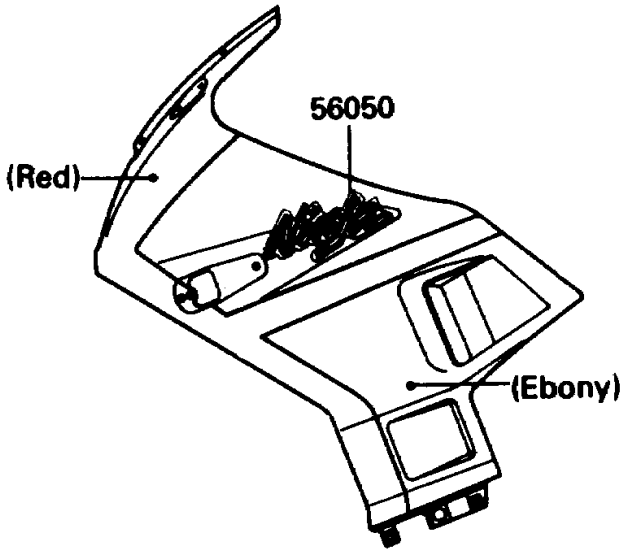

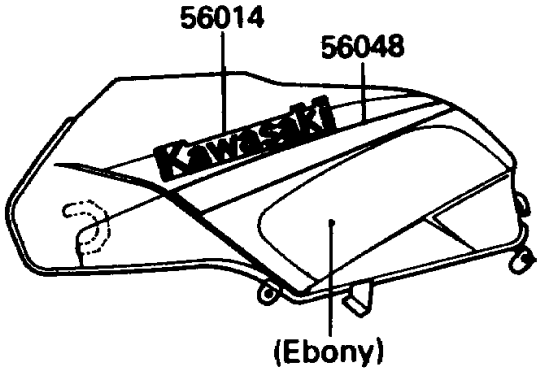

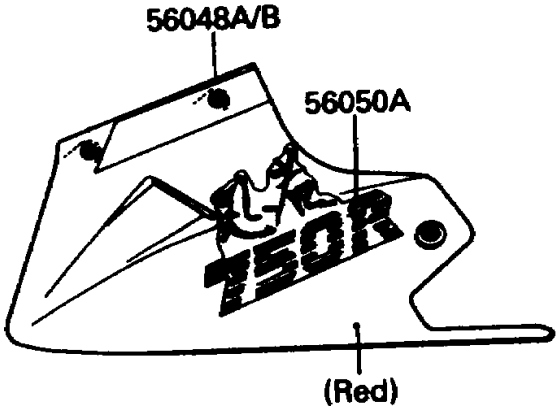

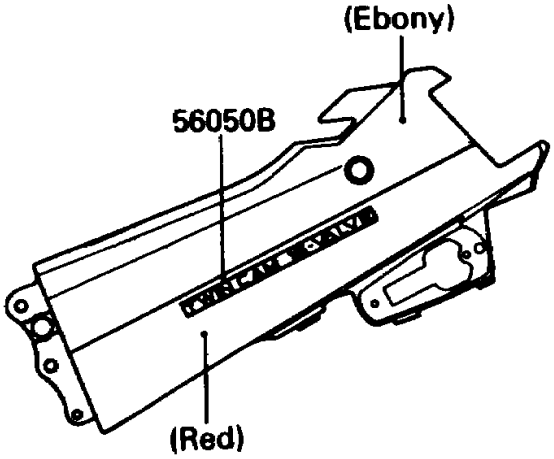

© 2025 Kawasaki Motors Corp., U.S.A.

1989 Ninja® 750R PARTS LIST

Decals

ITEM NAME	PART NUMBER	QUANTITY
EMBLEM,FUEL TANK,KAWASAKI (Ref # 56014)	56014-1215	2
PATTERN,FUEL TANK (Ref # 56048)	56048-1454	1
PATTERN,LWR COWLING,LH (Ref # 56048A)	56048-1455	1
PATTERN,LWR COWLING,RH (Ref # 56048B)	56048-1456	1
MARK,NINJA (Ref # 56050)	56050-1171	2
MARK,NINJA/750R (Ref # 56050A)	56050-1172	2
MARK,TWIN CAM 16-VALVE (Ref # 56050B)	56050-1173	2

© 2025 Kawasaki Motors Corp., U.S.A.