1989 Ninja® 750R PARTS DIAGRAM

Owner's Tools

F2810-0235

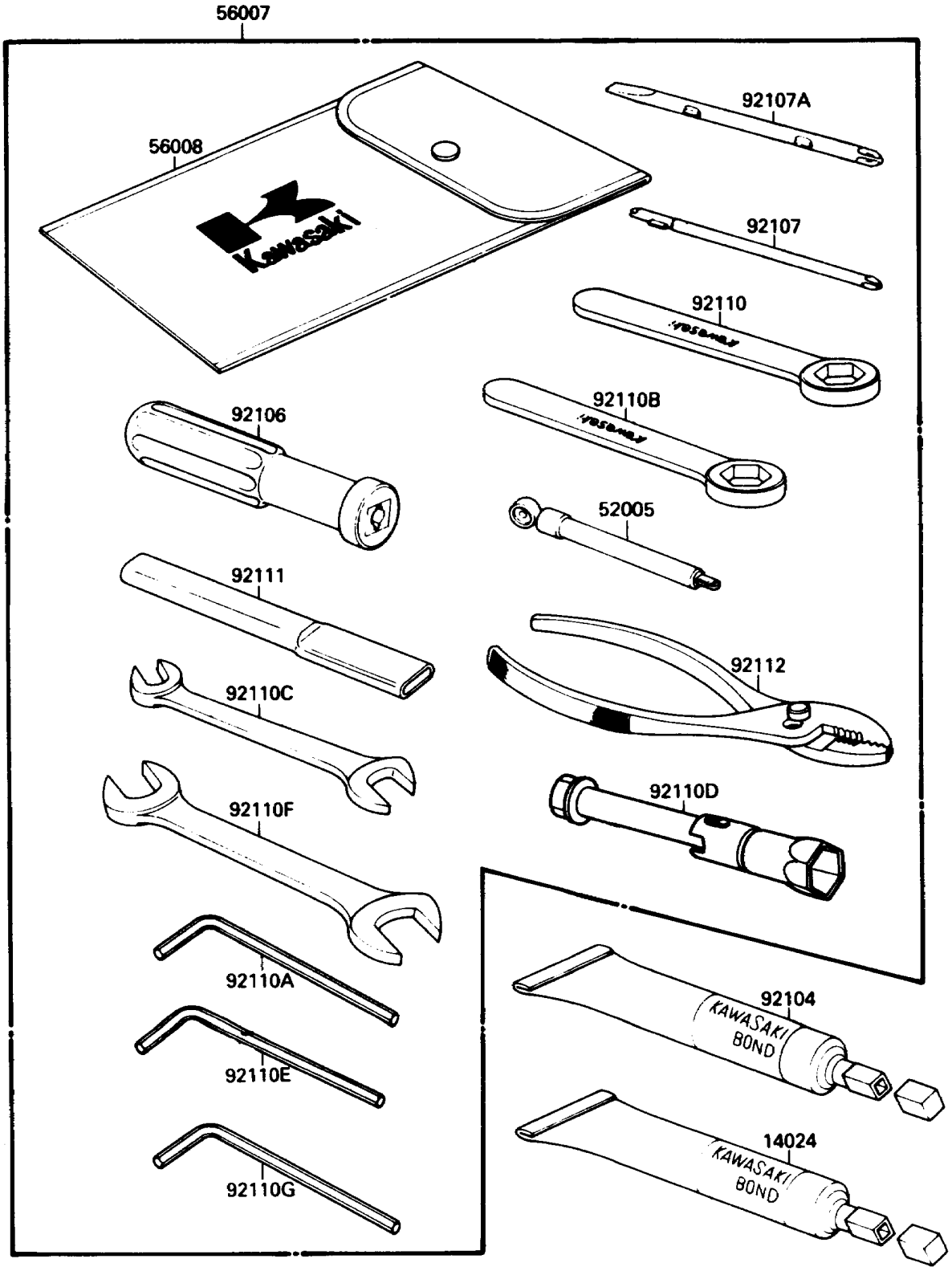

© 2025 Kawasaki Motors Corp., U.S.A.

1989 Ninja® 750R PARTS LIST

Owner's Tools

ITEM NAME	PART NUMBER	QUANTITY
THREE BOND TB1211,HT/RS,WHITE (Ref # 14024)	56019-120	1
GAUGE,AIR,3.5KG/CM2 (Ref # 52005)	52005-1031	1
TOOLKIT (Ref # 56007)	56007-1256	1
BAG,TOOL (Ref # 56008)	56008-1019	1
GASKET-LIQUID,TUBE,100G,BLACK (Ref # 92104)	92104-1003	1
GRIP-SCREW DRIVER (Ref # 92106)	92106-1001	1
TOOL-DRIVER,#3PHILLIPS (Ref # 92107)	92107-005	1
TOOL-DRIVER,#2PHILLIPS&SLOT (Ref # 92107A)	92107-1051	1
TOOL-WRENCH,BOX END,27MM (Ref # 92110)	92109-009	1
TOOL-WRENCH,ALLEN,5MM (Ref # 92110A)	92110-1015	1
TOOL-WRENCH,BOX END,22MM (Ref # 92110B)	92110-1024	1
TOOL-WRENCH,OPEN END,10X12 (Ref # 92110C)	92110-1117	1
TOOL-WRENCH,BOX,18MM (Ref # 92110D)	92110-1130	1
TOOL-WRENCH,ALLEN,4MM (Ref # 92110E)	92110-3703	1
TOOL-WRENCH,OPEN END,14X17 (Ref # 92110F)	92126-003	1
TOOL-WRENCH,ALLEN,6MM (Ref # 92110G)	92127-003	1
TOOL-BAR,BOX END WRENCH (Ref # 92111)	92111-1051	1
TOOL-PLIERS (Ref # 92112)	92112-003	1

© 2025 Kawasaki Motors Corp., U.S.A.