1989 Ninja® 750R PARTS DIAGRAM

Brake Pedal/Torque Link

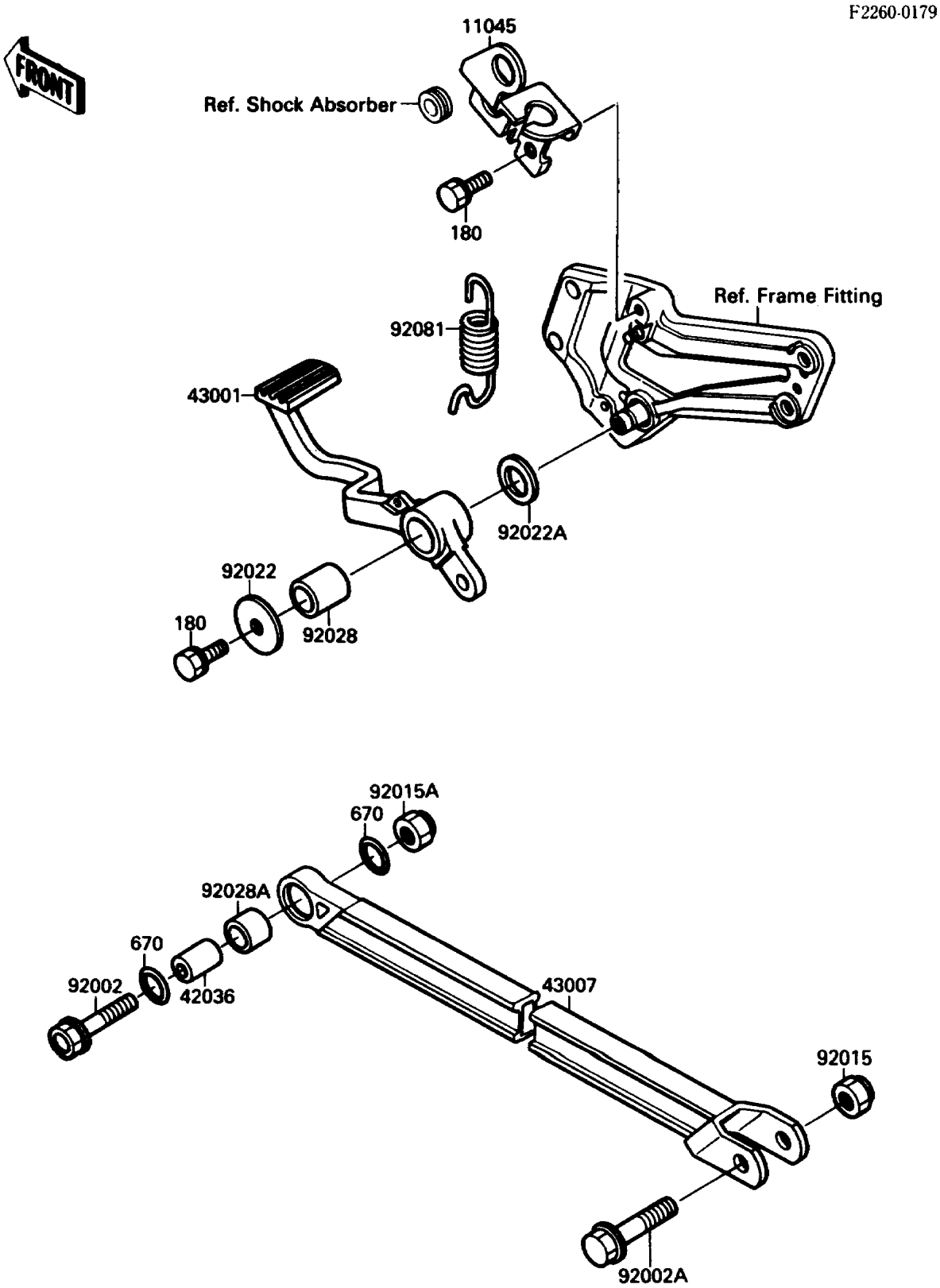

© 2025 Kawasaki Motors Corp., U.S.A.

1989 Ninja® 750R PARTS LIST

Brake Pedal/Torque Link

ITEM NAME	PART NUMBER	QUANTITY
BOLT-UPSET-WS (Ref # 180)	180H0614	2
O RING,16MM (Ref # 670)	670B2016	2
BRACKET,RR BRAKE LAMP SWITCH (Ref # 11045)	11045-1290	1
SLEEVE,8.1X16X20 (Ref # 42036)	42036-1200	1
LEVER-BRAKE,PEDAL (Ref # 43001)	43001-1214	1
ROD-TORQUE (Ref # 43007)	43007-1128	1
BOLT,8X35 (Ref # 92002)	92002-1198	1
BOLT,FLANGED,8X40 (Ref # 92002A)	92002-1838	1
NUT,CAP,LOCK,8MM (Ref # 92015)	92015-1133	1
NUT,U,8MM,BLACK (Ref # 92015A)	92015-1205	1
WASHER,7X28X1.6 (Ref # 92022)	92022-1282	1
WASHER,15.3X24X1 (Ref # 92022A)	92022-326	1
BUSHING,BRAKE PEDAL (Ref # 92028)	92028-1282	1
BUSHING (Ref # 92028A)	92028-1468	1
SPRING,BRAKE PEDAL (Ref # 92081)	92081-1833	1

© 2025 Kawasaki Motors Corp., U.S.A.