1989 Ninja® 750R PARTS DIAGRAM

Frame

F2120-0301

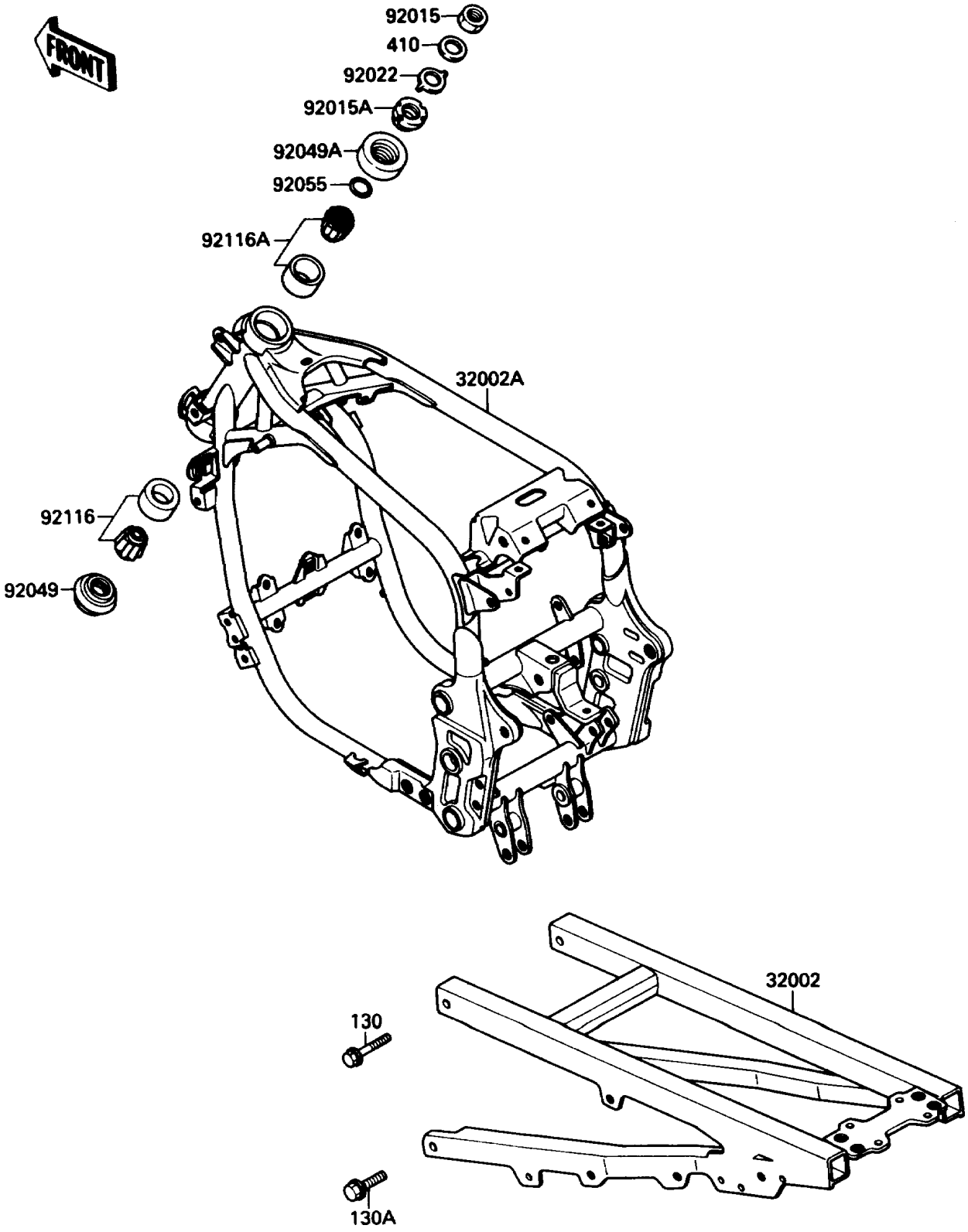

© 2025 Kawasaki Motors Corp., U.S.A.

1989 Ninja® 750R PARTS LIST

Frame

ITEM NAME	PART NUMBER	QUANTITY
BOLT-FLANGED,8X30 (Ref # 130)	130J0830	2
BOLT-FLANGED,10X20 (Ref # 130A)	130J1020	2
W-PLAIN-S (Ref # 410)	410F1800	1
FRAME-COMP,AL,RR (Ref # 32002)	32002-1917	1
FRAME-COMP,FR (Ref # 32002A)	32002-1945	1
NUT,18MM (Ref # 92015)	92015-1404	1
NUT,25MM,T=12 (Ref # 92015A)	92015-1546	1
WASHER,CLAW,18.5X30X2.3 (Ref # 92022)	92022-1555	1
SEAL-OIL,XMHE36X52X4J (Ref # 92049)	92049-1162	1
SEAL-OIL,STEERING STEM (Ref # 92049A)	92049-1214	1
RING-O,24.7MM (Ref # 92055)	92055-1160	1
BEARING-ROLLER,HR320/28XJ (Ref # 92116)	92116-1009	1
BEARING-ROLLER,HI-CAP32005JR-1 (Ref # 92116A)	92116-1056	1

© 2025 Kawasaki Motors Corp., U.S.A.