2017 BRUTE FORCE® 750 4x4i EPS PARTS DIAGRAM

Flap

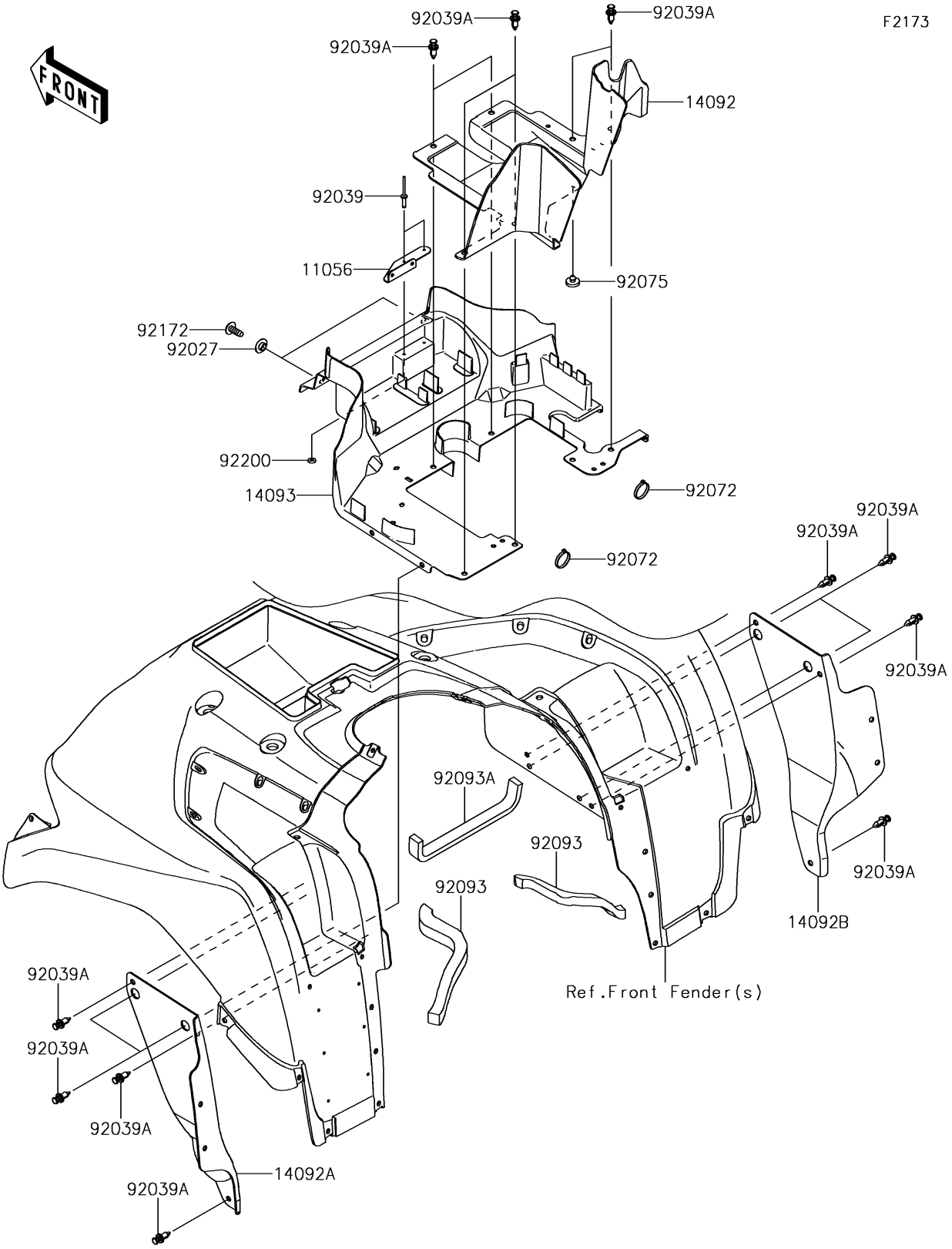

© 2025 Kawasaki Motors Corp., U.S.A.

2017 BRUTE FORCE® 750 4x4i EPS PARTS LIST

Flap

ITEM NAME	PART NUMBER	QUANTITY
BRACKET,V.D. SENSOR (Ref # 11056)	11056-0956	1
COVER,TOP INNER,RR (Ref # 14092)	14092-0182	1
COVER,SIDE INNER,LH (Ref # 14092A)	14092-0183	1
COVER,SIDE INNER,RH (Ref # 14092B)	14092-0184	1
COVER,TOP INNER,FR (Ref # 14093)	14093-0022	1
COLLAR (Ref # 92027)	92027-4020	2
RIVET (Ref # 92039)	92039-0031	2
RIVET (Ref # 92039A)	92039-0776	16
BAND,L=292.1 (Ref # 92072)	92072-3509	2
DAMPER,BOOST SENSOR (Ref # 92075)	92075-2113	1
SEAL,20X270X30 (Ref # 92093)	92093-0570	2
SEAL,20X300X20 (Ref # 92093A)	92093-0571	1
SCREW,TAPPING,6X16 (Ref # 92172)	92172-0739	2
WASHER,3.5X8X1 (Ref # 92200)	92200-1251	2

© 2025 Kawasaki Motors Corp., U.S.A.