2025 MULE PRO-FXR 1000

PARTS DIAGRAM

Carrier(s)

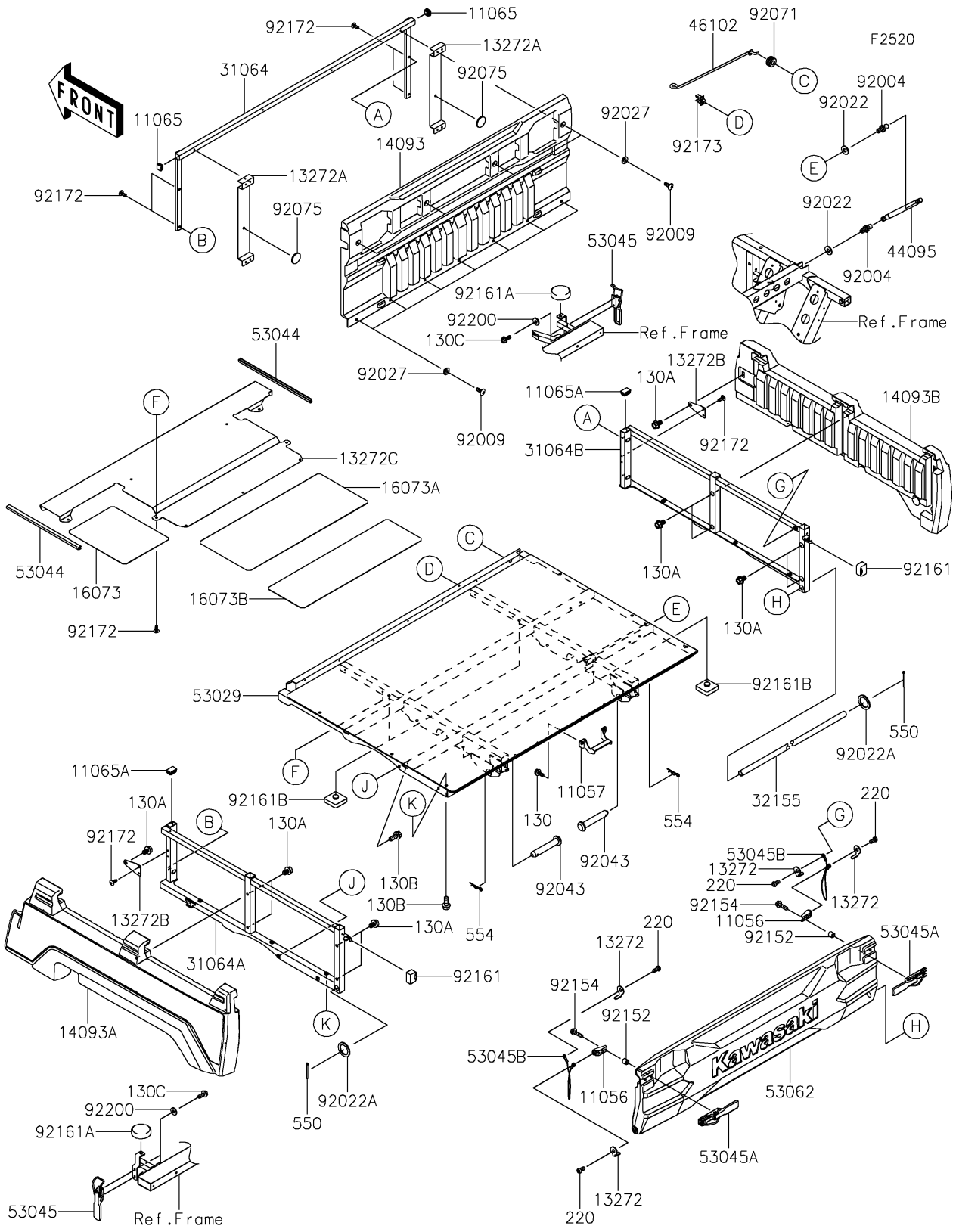

© 2026 Kawasaki Motors Corp., U.S.A.

2025 MULE PRO-FXR 1000

PARTS LIST

Carrier(s)

ITEM NAME	PART NUMBER	QUANTITY
BRACKET,STOPPER (Ref # 11056)	11056-2848	2
BRACKET,GATE SUPPORT (Ref # 11057)	11057-1438	1
CAP (Ref # 11065)	11065-0901	2
CAP (Ref # 11065A)	11065-0907	2
PLATE (Ref # 13272)	13272-1597	4
PLATE,FR COVER (Ref # 13272A)	13272-2101	2
PLATE (Ref # 13272B)	13272-2299	2
PLATE (Ref # 13272C)	13272-4154	1
COVER,SCREEN (Ref # 14093)	14093-0301	1
COVER,RESIN PANEL,LH,F.BLACK (Ref # 14093A)	14093-0585-6Z	1
COVER,RESIN PANEL,RH,BLACK (Ref # 14093B)	14093-1441-6Z	1
INSULATOR,265X335 (Ref # 16073)	16073-0878	1
INSULATOR,295X705 (Ref # 16073A)	16073-0879	1
INSULATOR,210X705 (Ref # 16073B)	16073-0881	1
PIPE-COMP,FR FRAME (Ref # 31064)	31064-0663	1
PIPE-COMP,SIDE FRAME,LH (Ref # 31064A)	31064-0688	1
PIPE-COMP,SIDE FRAME,RH (Ref # 31064B)	31064-0689	1
PIPE (Ref # 32155)	32155-1533	1
DAMPER-GAS FILLED (Ref # 44095)	44095-0002	1
ROD (Ref # 46102)	46102-0629	1
CARRIER,BASE (Ref # 53029)	53029-0379	1
TRIM,HEAT COVER (Ref # 53044)	53044-0583	2
HOOK-ASSY,MAIN LOCK (Ref # 53045)	53045-0025	2
HOOK-ASSY,MAIN CLAMP (Ref # 53045A)	53045-0026	2
HOOK-ASSY (Ref # 53045B)	53045-0029	2
GATE-TAIL (Ref # 53062)	53062-0022	1
STUD (Ref # 92004)	92004-0733	2
SCREW,TAPPING,6X16 (Ref # 92009)	92009-1166	11
WASHER,8.2X19X2 (Ref # 92022)	92022-1533	2

© 2026 Kawasaki Motors Corp., U.S.A.

2025 MULE PRO-FXR 1000

PARTS LIST

Carrier(s)

ITEM NAME	PART NUMBER	QUANTITY
WASHER,23X32X2.3 (Ref # 92022A)	92022-1618	2
COLLAR,L=4.6 (Ref # 92027)	92027-1168	11
PIN,12.4X72.4 (Ref # 92043)	92043-0716	2
GROMMET,7.5X14X11 (Ref # 92071)	92071-0763	1
DAMPER,RUBBER (Ref # 92075)	92075-261	2
COLLAR,6.8X10X9.3 (Ref # 92152)	92152-1799	4
BOLT,FLANGED,6X22 (Ref # 92154)	92154-1356	4
DAMPER (Ref # 92161)	92161-1656	2
DAMPER,10X40X10 (Ref # 92161A)	92161-1775	2
DAMPER,10X34X10 (Ref # 92161B)	92161-1920	4
SCREW,TAPPING,6X16 (Ref # 92172)	92172-0739	17
CLAMP (Ref # 92173)	92173-1850	1
WASHER,6.5X16X2.0 (Ref # 92200)	92200-1543	4
BOLT-FLANGED,6X14 (Ref # 130)	130BA0614	2
BOLT-FLANGED,8X12 (Ref # 130A)	130BA0812	10
BOLT-FLANGED,8X20 (Ref # 130B)	130BA0820	10
BOLT-FLANGED,6X16 (Ref # 130C)	130CA0616	4
SCREW-PAN-CROS,6X10 (Ref # 220)	220AB0610	4
PIN-COTTER,3.0X30 (Ref # 550)	550AA3030	2
PIN-SNAP,12MM (Ref # 554)	554DA1200	2

© 2026 Kawasaki Motors Corp., U.S.A.