2019 MULE SX™ 4x4 XC CAMO FI PARTS DIAGRAM

Reflectors

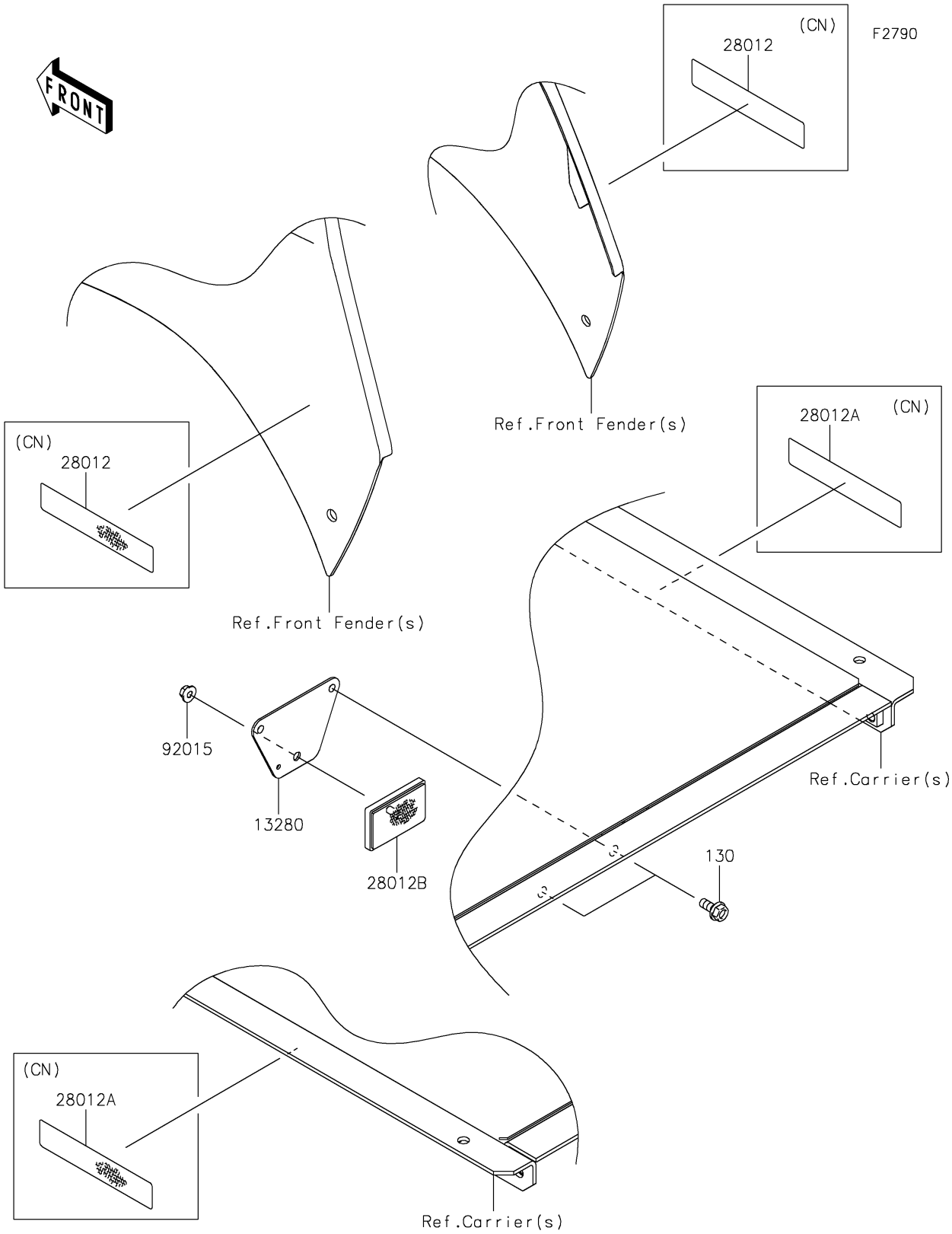

© 2025 Kawasaki Motors Corp., U.S.A.

2019 MULE SX™ 4x4 XC CAMO FI PARTS LIST

Reflectors

ITEM NAME	PART NUMBER	QUANTITY
HOLDER,REFLECTOR (Ref # 13280)	13280-0937	1
REFLECTOR-REFLEX,YELLOW (Ref # 28012)	28012-0053	2
REFLECTOR-REFLEX,RED (Ref # 28012A)	28012-0054	2
REFLECTOR-REFLEX (Ref # 28012B)	28012-1088	1
NUT,FLANGED,5MM (Ref # 92015)	92015-1259	1
BOLT-FLANGED,6X14 (Ref # 130)	130BA0614	2

© 2025 Kawasaki Motors Corp., U.S.A.