2019 MULE SX™ 4x4 XC CAMO FI PARTS DIAGRAM

Frame

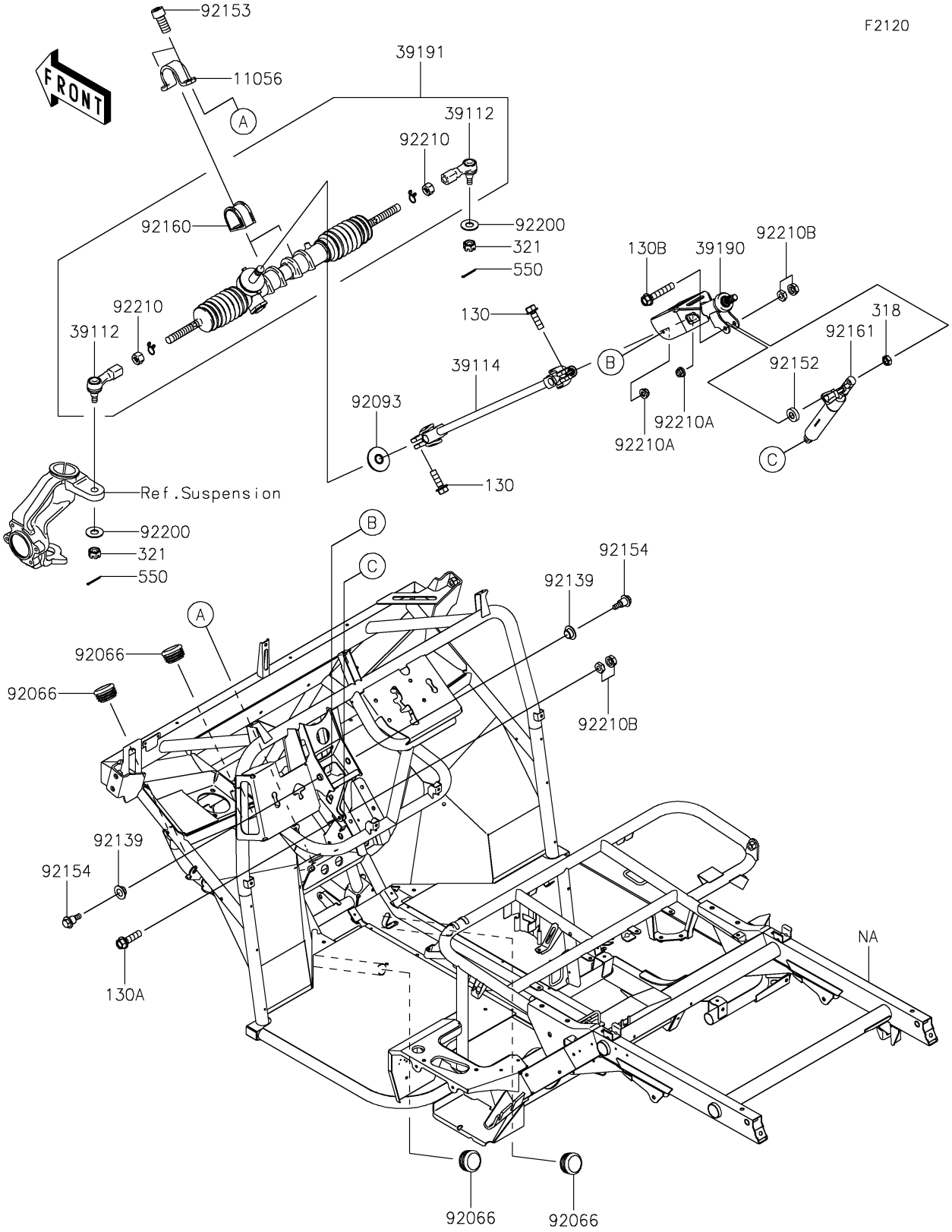

© 2025 Kawasaki Motors Corp., U.S.A.

2019 MULE SX™ 4x4 XC CAMO FI PARTS LIST

Frame

ITEM NAME	PART NUMBER	QUANTITY
BRACKET,STEERING GEAR (Ref # 11056)	11056-2238	2
RODEND-TIE,STEERING GEAR (Ref # 39112)	39112-0008	2
SHAFT-COMP-STRG (Ref # 39114)	39114-0022	1
SHAFT-ASSY-STEERING (Ref # 39190)	39190-0006	1
GEAR-ASSY-STEERING (Ref # 39191)	39191-0023	1
PLUG (Ref # 92066)	92066-0036	4
SEAL (Ref # 92093)	92093-1313	1
BUSHING (Ref # 92139)	92139-0230	2
COLLAR,8.2X18X5 (Ref # 92152)	92152-1848	1
BOLT,SOCKET,10X23 (Ref # 92153)	92153-1269	4
BOLT,6X21.5 (Ref # 92154)	92154-1320	2
DAMPER,STEERING GEAR (Ref # 92160)	92160-1084	2
DAMPER,GAS SPRING (Ref # 92161)	92161-1825	1
WASHER,10.3X23X1.6 (Ref # 92200)	92200-2009	2
NUT,14MM (Ref # 92210)	92210-0217	2
NUT,LOCK,FLANGED,6MM (Ref # 92210A)	92210-0303	2
NUT,HARD LOCK,8MM (Ref # 92210B)	92210-0934	2
BOLT-FLANGED,8X25 (Ref # 130)	130BA0825	2
BOLT-FLANGED,8X30 (Ref # 130A)	130CA0830	1
BOLT-FLANGED,8X45 (Ref # 130B)	130CA0845	1
NUT-HEX-SMALL,8MM (Ref # 318)	318BA0800	1
NUT-CASTLE (Ref # 321)	321BA1000	2
PIN-COTTER,2.0X22 (Ref # 550)	550AA2022	2

© 2025 Kawasaki Motors Corp., U.S.A.