2019 MULE SX™ 4x4 XC CAMO FI PARTS DIAGRAM

Control

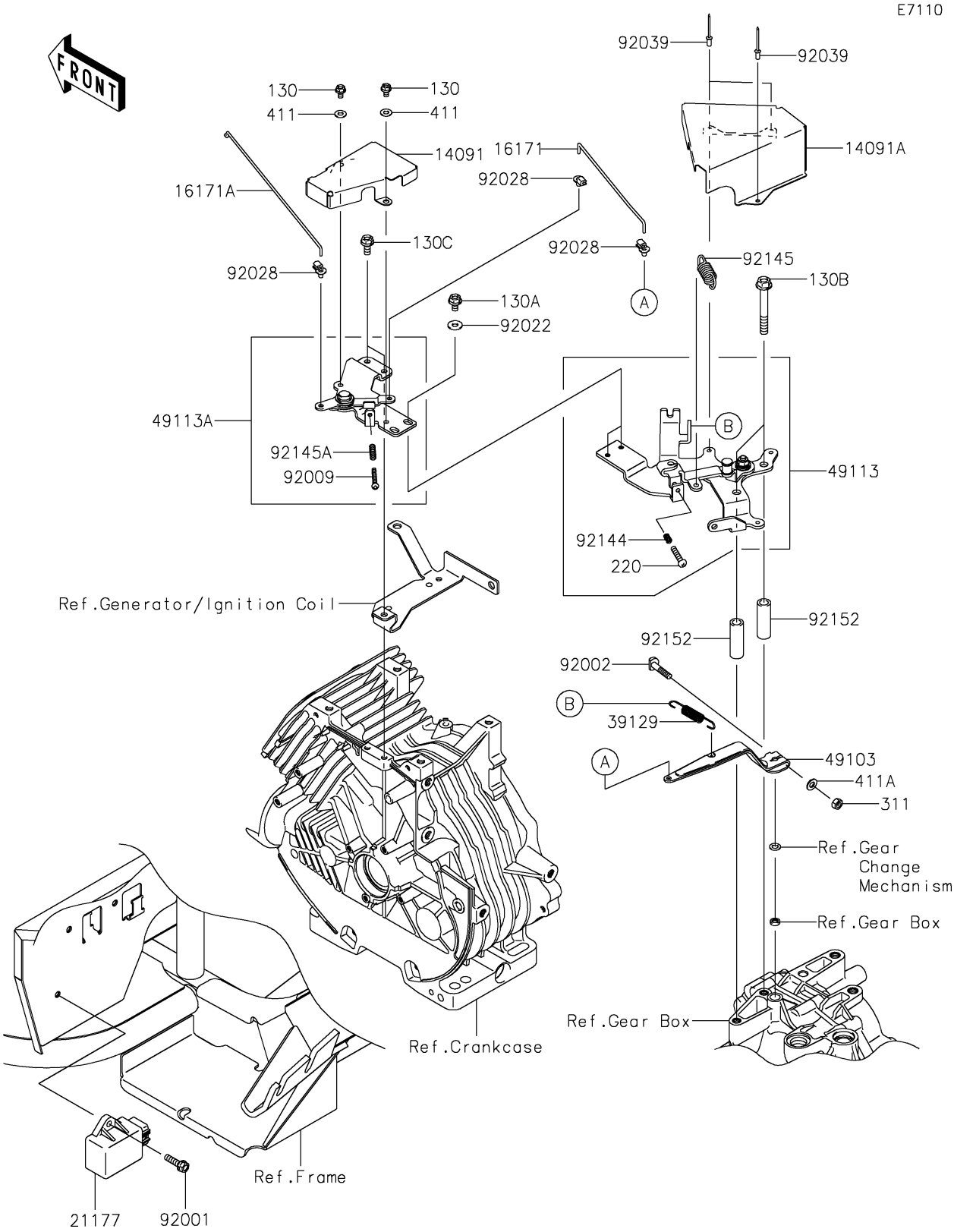

© 2025 Kawasaki Motors Corp., U.S.A.

2019 MULE SX™ 4x4 XC CAMO FI PARTS LIST

Control

ITEM NAME	PART NUMBER	QUANTITY
COVER,FR (Ref # 14091)	14091-0401	1
COVER,RR (Ref # 14091A)	14091-0402	1
LINK (Ref # 16171)	16171-0007	1
LINK,GOVERNOR (Ref # 16171A)	16171-0046	1
CONTROLLER (Ref # 21177)	21177-0003	1
SPRING-GOVERNOR (Ref # 39129)	39129-0006	1
ARM-GOVERNOR (Ref # 49103)	49103-1055	1
PANEL-COMP-CONTROL (Ref # 49113)	49113-0006	1
PANEL-COMP-CONTROL (Ref # 49113A)	49113-0046	1
BOLT,FLANGED,6X22 (Ref # 92001)	92001-1352	1
BOLT,6X28 (Ref # 92002)	92002-2269	1
SCREW,4X30 (Ref # 92009)	92009-7002	1
WASHER,6.2X15X1.2 (Ref # 92022)	92022-2373	2
BUSHING,GOVERNOR (Ref # 92028)	92028-2156	3
RIVET,BLIND,4.0X9.2 (Ref # 92039)	92039-1163	3
SPRING (Ref # 92144)	92144-2266	1
SPRING,RETURN (Ref # 92145)	92145-0301	1
SPRING (Ref # 92145A)	92145-7005	1
COLLAR,9.1X13.95X42 (Ref # 92152)	92152-7501	2
BOLT-FLANGED,5X8 (Ref # 130)	130BA0508	2
BOLT-FLANGED,6X10 (Ref # 130A)	130BA0610	2
BOLT-FLANGED,8X60 (Ref # 130B)	130BA0860	2
BOLT-FLANGED,6X14 (Ref # 130C)	130BB0614	2
SCREW-PAN-CROS,5X22 (Ref # 220)	220AA0522	1
NUT-HEX,6MM (Ref # 311)	311AA0600	1
WASHER-PLAIN,5MM (Ref # 411)	411AA0500	2
WASHER-PLAIN,6MM (Ref # 411A)	411AA0600	1

© 2025 Kawasaki Motors Corp., U.S.A.