2019 MULE SX™ 4x4 XC CAMO FI PARTS DIAGRAM

Transmission

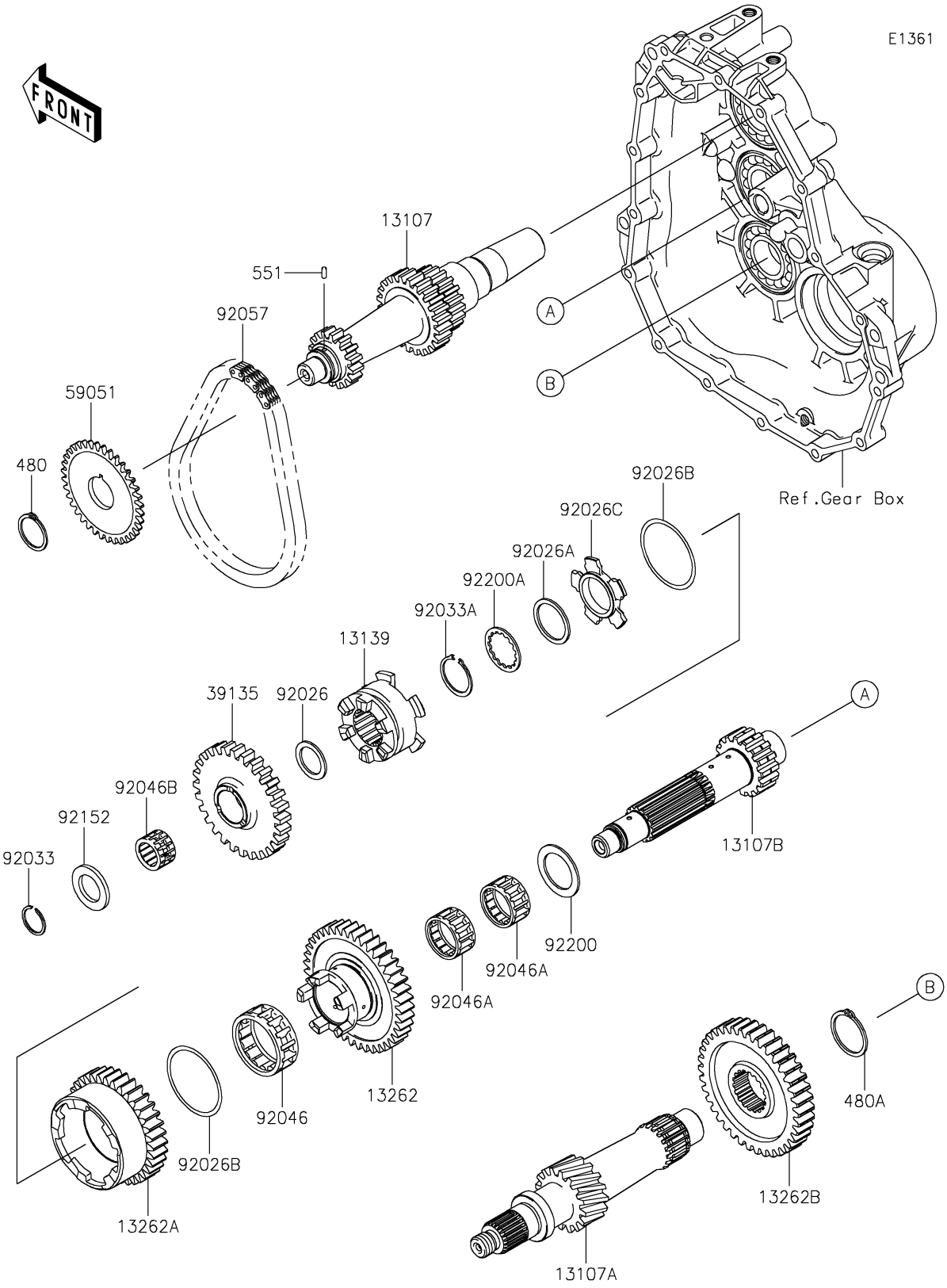

© 2025 Kawasaki Motors Corp., U.S.A.

2019 MULE SX™ 4x4 XC CAMO FI PARTS LIST

Transmission

ITEM NAME	PART NUMBER	QUANTITY
SHAFT,FIRST,INPUT,16T&24T&19T (Ref # 13107)	13107-0039	1
SHAFT,THIRD,16T (Ref # 13107A)	13107-0088	1
SHAFT,2ND,17T (Ref # 13107B)	13107-0222	1
SHIFTER,FR/RR (Ref # 13139)	13139-0004	1
GEAR,LOW,41T (Ref # 13262)	13262-0106	1
GEAR,HIGH,35T (Ref # 13262A)	13262-0107	1
GEAR-TRANSMISSION SPUR,38T (Ref # 13262B)	13262-0742	1
SPROCKET-DRIVEN,30T (Ref # 39135)	39135-0001	1
GEAR-SPUR,37T (Ref # 59051)	59051-0049	1
SPACER,21.2X29X1.6 (Ref # 92026)	92026-1568	1
SPACER,28.2X34.5X1.6 (Ref # 92026A)	92026-1587	1
SPACER,48.2X54.3X1.0 (Ref # 92026B)	92026-1599	2
SPACER,HI&LOW (Ref # 92026C)	92026-1600	1
RING-SNAP,20MM (Ref # 92033)	92033-015	1
RING-SNAP,25.9X30.6X1.2 (Ref # 92033A)	92033-1037	1
BEARING-NEEDLE,HIGH GEAR (Ref # 92046)	92046-1276	1
BEARING-NEEDLE,FWF-283317 (Ref # 92046A)	92046-1278	2
BEARING-NEEDLE,REVERSE GEAR (Ref # 92046B)	92046-1279	1
CHAIN,REVERSE,23RH302-38ASM (Ref # 92057)	92057-0072	1
COLLAR,21.2X34.0X3.0 (Ref # 92152)	92152-0241	1
WASHER,28.2X40.0X1.6 (Ref # 92200)	92200-0090	1
WASHER,28.5X34.0X1.5 (Ref # 92200A)	92200-1240	1
CIRCLIP-TYPE-C,25MM (Ref # 480)	480J2500	1
CIRCLIP-TYPE-C,32MM (Ref # 480A)	480J3200	1
PIN-DOWEL,3X8 (Ref # 551)	551A0308	1

© 2025 Kawasaki Motors Corp., U.S.A.