2019 MULE SX™ 4x4 XC FI PARTS DIAGRAM

Drive Converter

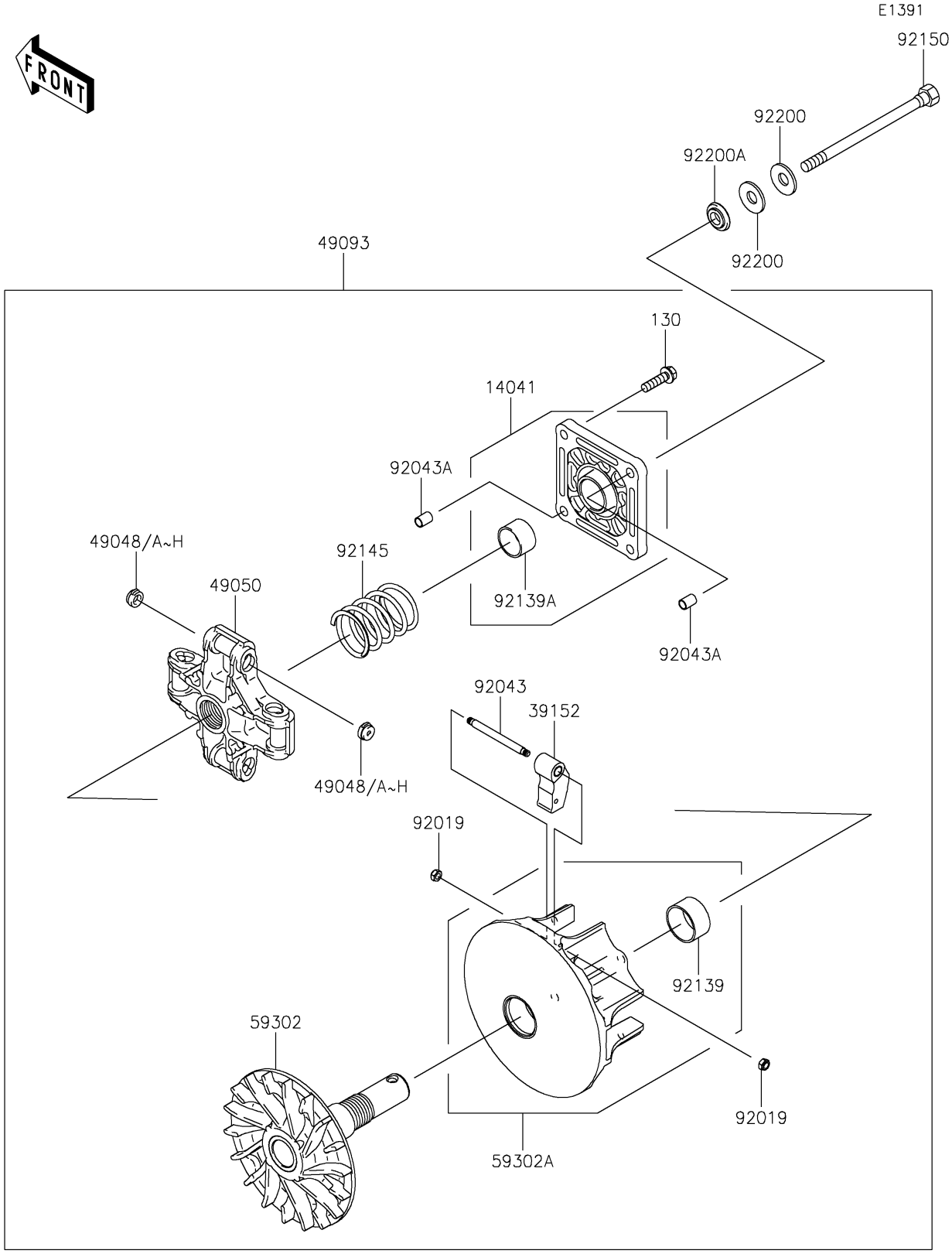

© 2026 Kawasaki Motors Corp., U.S.A.

2019 MULE SX™ 4x4 XC FI PARTS LIST

Drive Converter

ITEM NAME	PART NUMBER	QUANTITY
COVER-COMP (Ref # 14041)	14041-0022	1
WEIGHT-RAMP (Ref # 39152)	39152-0031	4
SHOE,T=7.2 (Ref # 49048)	49048-1087	AR
SHOE,T=7.3 (Ref # 49048A)	49048-1088	AR
SHOE,T=7.4 (Ref # 49048B)	49048-1089	AR
SHOE,T=7.5 (Ref # 49048C)	49048-1090	8
SHOE,T=7.6 (Ref # 49048D)	49048-1091	AR
SHOE,T=7.7 (Ref # 49048E)	49048-1092	AR
SHOE,T=7.8 (Ref # 49048F)	49048-1093	AR
SHOE,T=7.9 (Ref # 49048G)	49048-1094	AR
SHOE,T=8.0 (Ref # 49048H)	49048-1095	AR
SPIDER (Ref # 49050)	49050-0012	1
CONVERTER-ASSY-DRIVE (Ref # 49093)	49093-0031	1
SHEAVE-COMP,FIXED (Ref # 59302)	59302-0005	1
SHEAVE-COMP (Ref # 59302A)	59302-0097	1
NUT,LOCK,6MM (Ref # 92019)	92019-008	8
PIN (Ref # 92043)	92043-0809	4
PIN,8.2X10X14 (Ref # 92043A)	92043-1264	2
BUSHING (Ref # 92139)	92139-0049	1
BUSHING (Ref # 92139A)	92139-0050	1
SPRING (Ref # 92145)	92145-0742	1
BOLT,12X163.5 (Ref # 92150)	92150-1008	1
WASHER (Ref # 92200)	92200-0249	2
WASHER (Ref # 92200A)	92200-1634	1
BOLT-FLANGED,8X30 (Ref # 130)	130CA0830	4

© 2026 Kawasaki Motors Corp., U.S.A.