2006 Brute Force 650 4x4i PARTS DIAGRAM

Headlight(s)(F6F-F9F)

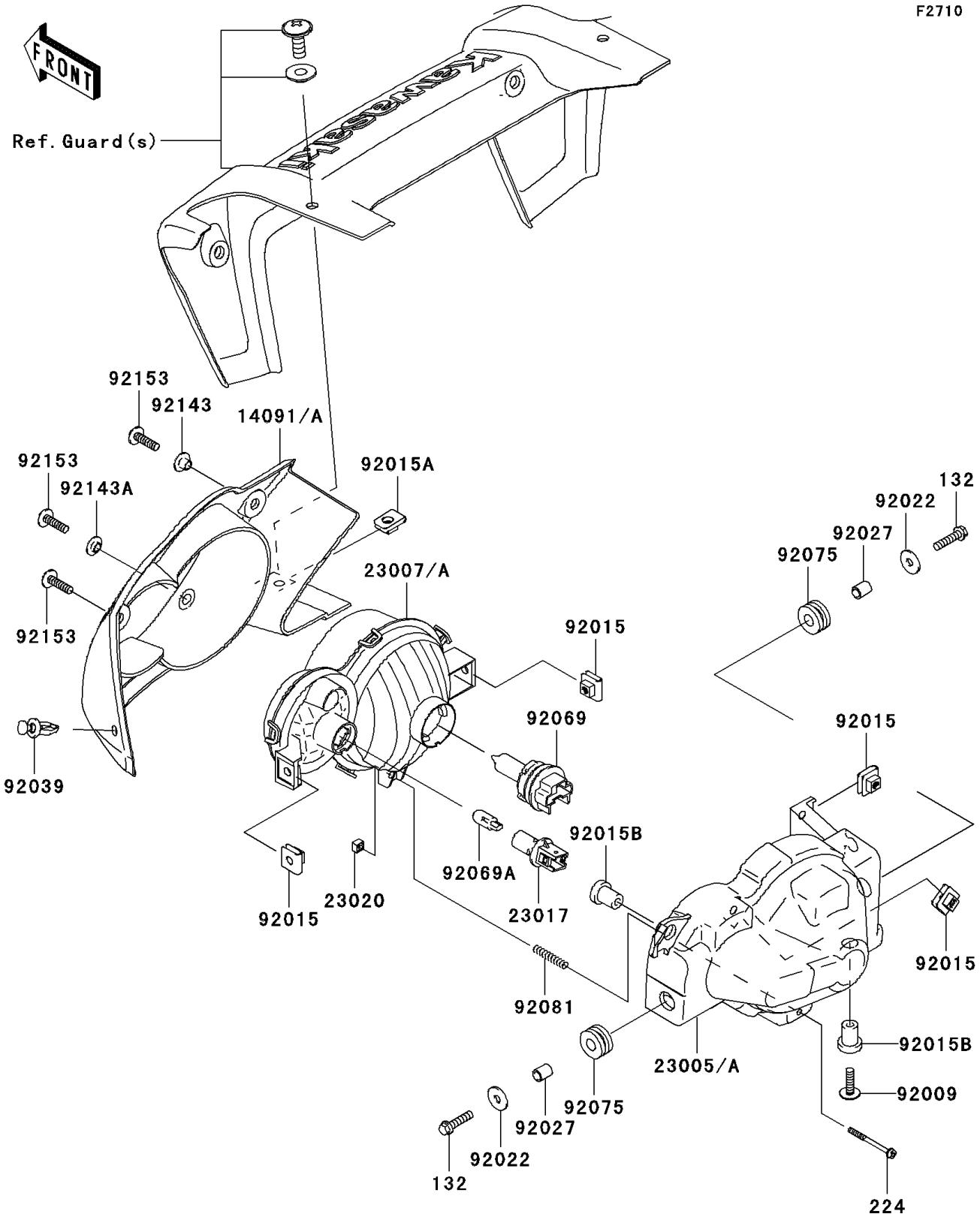

© 2024 Kawasaki Motors Corp., U.S.A.

2006 Brute Force 650 4x4i PARTS LIST

Headlight(s)(F6F-F9F)

ITEM NAME	PART NUMBER	QUANTITY
BOLT-FLANGED-SMALL,6X25 (Ref # 132)	132BA0625	4
SCREW-PAN-WP-CROS,4X45 (Ref # 224)	224AA0445	2
COVER,HEAD LAMP,LH,F.BLACK (Ref # 14091)	14091-0132-6Z	1
COVER,HEAD LAMP,RH,F.BLACK (Ref # 14091A)	14091-0133-6Z	1
BODY-COMP-HEAD LAMP,LH (Ref # 23005)	23005-0006	1
BODY-COMP-HEAD LAMP,RH (Ref # 23005A)	23005-0007	1
LENS-COMP,HEAD LAMP,LH (Ref # 23007)	23007-0024	1
LENS-COMP,HEAD LAMP,RH (Ref # 23007A)	23007-0025	1
SOCKET,HEAD LAMP (Ref # 23017)	23017-0001	2
NUT,4MM,FOCUS ADJUST (Ref # 23020)	23020-018	2
SCREW,6X22 (Ref # 92009)	92009-1664	2
NUT,6MM (Ref # 92015)	92015-1094	8
NUT,6MM (Ref # 92015A)	92015-1602	2
NUT,RUBBER,6MM (Ref # 92015B)	92015-1692	4
WASHER,6.5X20X1.6 (Ref # 92022)	92022-125	4
COLLAR,6.8X10X12 (Ref # 92027)	92027-162	4
RIVET (Ref # 92039)	92039-1229	2
BULB,12V 40/40W (Ref # 92069)	92069-0005	2
BULB,12V 5W (Ref # 92069A)	92069-0006	2
DAMPER (Ref # 92075)	92075-1690	4
SPRING,FOCUS ADJUST (Ref # 92081)	92081-1896	2
COLLAR (Ref # 92143)	92143-1057	2
COLLAR (Ref # 92143A)	92143-1087	2
BOLT,SOCKET,6X22 (Ref # 92153)	92153-0574	6

© 2024 Kawasaki Motors Corp., U.S.A.