# 2022 NINJA H2®R PARTS DIAGRAM

Seat

F2510

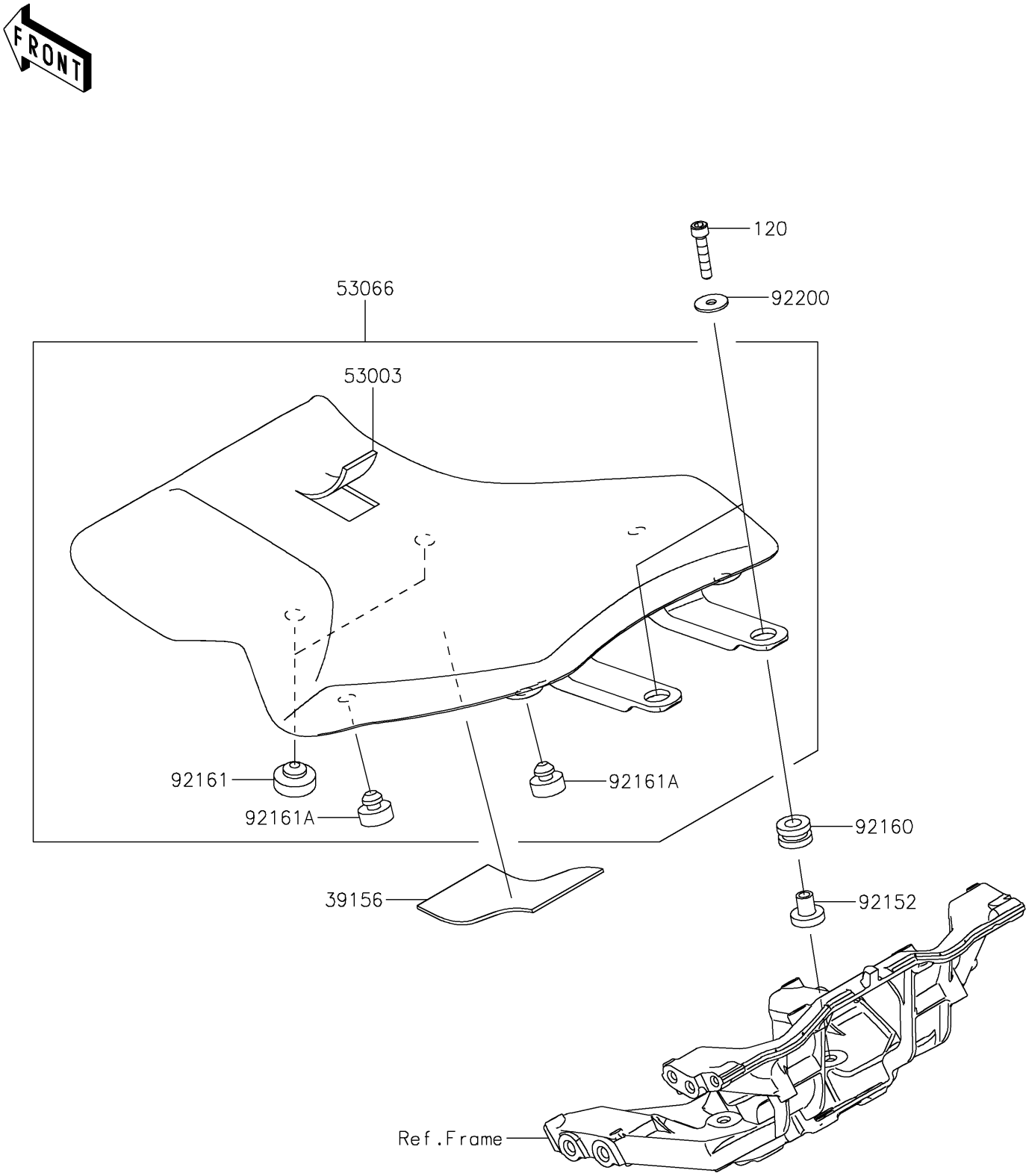


© 2025 Kawasaki Motors Corp., U.S.A.

# 2022 NINJA H2®R PARTS LIST

Seat

| ITEM NAME | PART NUMBER | QUANTITY |
|---|---|---|
| PAD,RR FRM (Ref # 39156) | 39156-1778 | 1 |
| LEATHER,BLACK (Ref # 53003) | 53003-0404-MA | 1 |
| SEAT-ASSY,BLACK (Ref # 53066) | 53066-0462-MA | 1 |
| COLLAR,6.5X20X16.8 (Ref # 92152) | 92152-2119 | 2 |
| DAMPER,10X20X12 (Ref # 92160) | 92160-1167 | 2 |
| DAMPER,SEAT,10X25X8 (Ref # 92161) | 92161-0095 | 2 |
| DAMPER,8X20X8 (Ref # 92161A) | 92161-0223 | 4 |
| WASHER,6X20X1.6 (Ref # 92200) | 92200-0212 | 2 |
| BOLT-SOCKET,6X30 (Ref # 120) | 120CA0630 | 2 |

© 2025 Kawasaki Motors Corp., U.S.A.