2022 NINJA H2®R

PARTS DIAGRAM

Seat

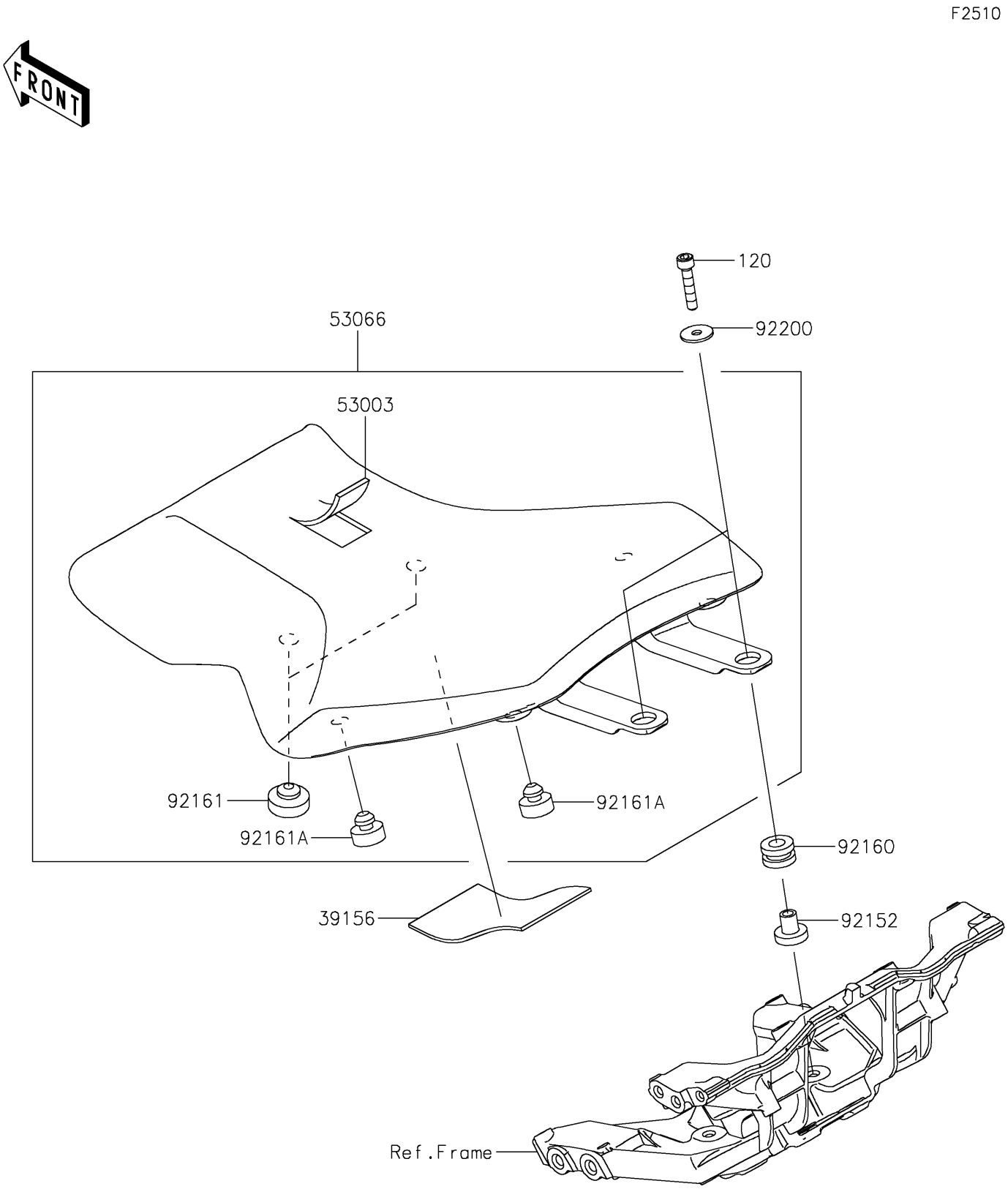

© 2026 Kawasaki Motors Corp., U.S.A.

2022 NINJA H2®R

PARTS LIST

Seat

ITEM NAME	PART NUMBER	QUANTITY
PAD,RR FRM (Ref # 39156)	39156-1778	1
LEATHER,BLACK (Ref # 53003)	53003-0404-MA	1
SEAT-ASSY,BLACK (Ref # 53066)	53066-0462-MA	1
COLLAR,6.5X20X16.8 (Ref # 92152)	92152-2119	2
DAMPER,10X20X12 (Ref # 92160)	92160-1167	2
DAMPER,SEAT,10X25X8 (Ref # 92161)	92161-0095	2
DAMPER,8X20X8 (Ref # 92161A)	92161-0223	4
WASHER,6X20X1.6 (Ref # 92200)	92200-0212	2
BOLT-SOCKET,6X30 (Ref # 120)	120CA0630	2

© 2026 Kawasaki Motors Corp., U.S.A.