2024 Ninja 500 PARTS DIAGRAM

Gear Change Drum/Shift Fork(s)

E1362

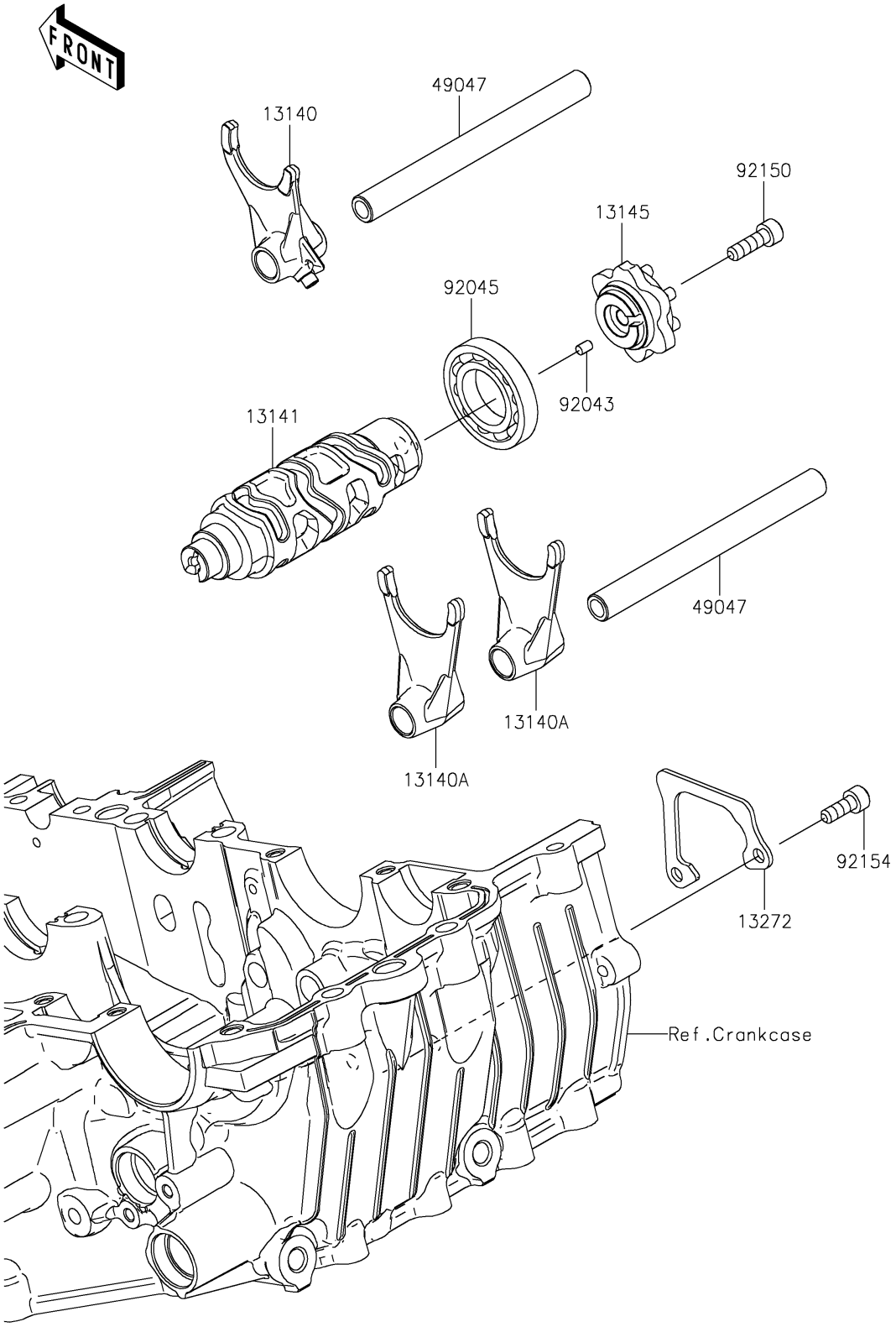

© 2025 Kawasaki Motors Corp., U.S.A.

2024 Ninja 500 PARTS LIST

Gear Change Drum/Shift Fork(s)

ITEM NAME	PART NUMBER	QUANTITY
FORK-SHIFT,IN (Ref # 13140)	13140-0662	1
FORK-SHIFT,OUT (Ref # 13140A)	13140-0663	2
DRUM-CHANGE (Ref # 13141)	13141-0597	1
CAM-CHANGE DRUM (Ref # 13145)	13145-0570	1
PLATE (Ref # 13272)	13272-2374	1
ROD-SHIFT (Ref # 49047)	49047-0634	2
PIN,4X6 (Ref # 92043)	92043-1744	1
BEARING-BALL,16005 (Ref # 92045)	92045-1045	1
BOLT,SOCKET,6X20 (Ref # 92150)	92150-1880	1
BOLT,SOCKET,6X16 (Ref # 92154)	92154-0235	2

© 2025 Kawasaki Motors Corp., U.S.A.