# 2003 Ninja® ZX™-6RR PARTS DIAGRAM

Tires

F2210

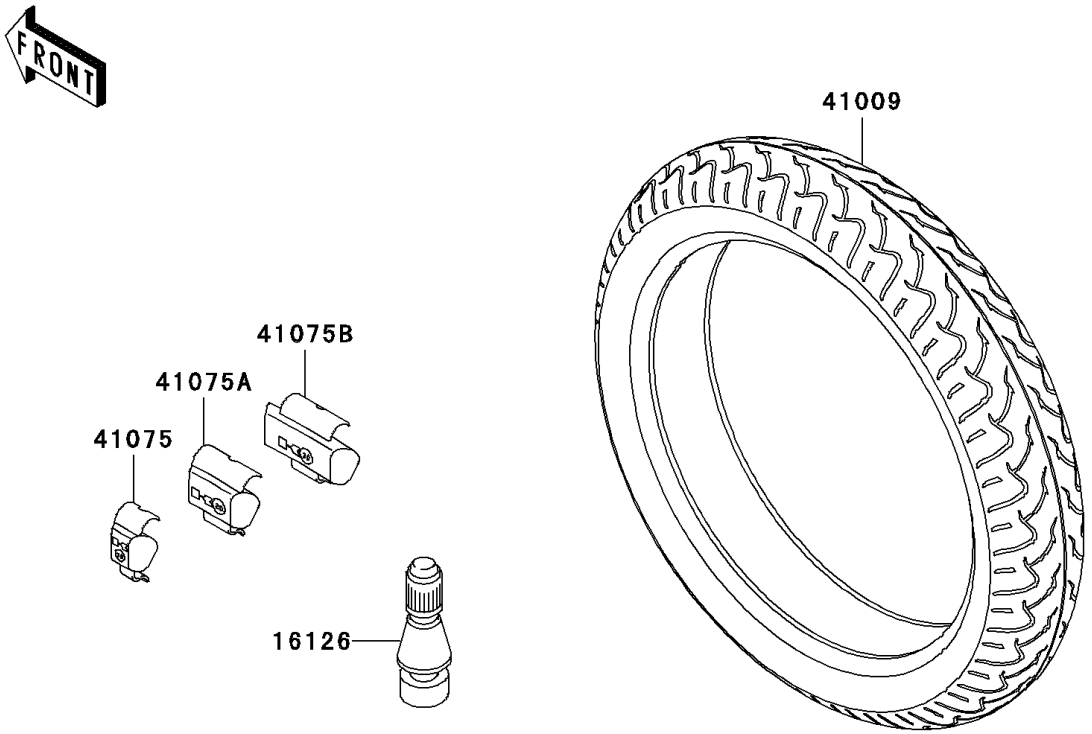


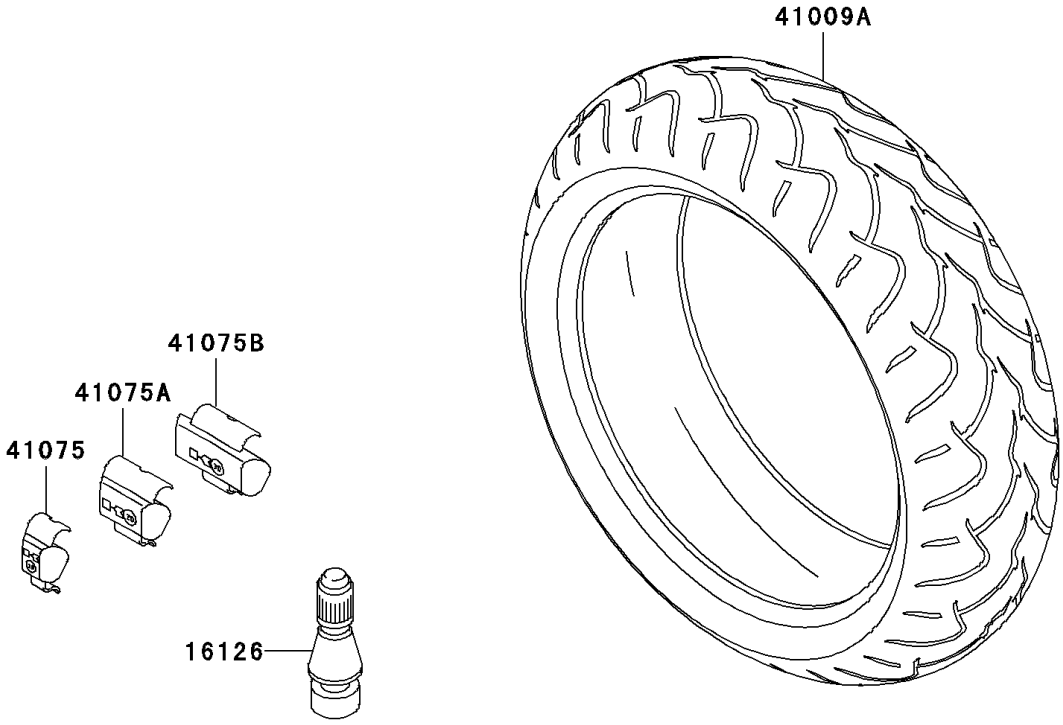


© 2024 Kawasaki Motors Corp., U.S.A.

# 2003 Ninja® ZX™-6RR PARTS LIST

Tires

| ITEM NAME | PART NUMBER | QUANTITY |
|---|---|---|
| VALVE,TIRE (Ref # 16126) | 16126-1140 | 2 |
| TIRE,FR,120/65ZR17(56W),BT019F (Ref # 41009) | 41009-0014 | 1 |
| TIRE,RR,180/55ZR17(73W),BT012R (Ref # 41009A) | 41009-0015 | 1 |
| BALANCER-WHEEL,10G,SILVER (Ref # 41075) | 41075-1014 | AR |
| BALANCER-WHEEL,20G,SILVER (Ref # 41075A) | 41075-1015 | AR |
| BALANCER-WHEEL,30G,SILVER (Ref # 41075B) | 41075-1016 | AR |

© 2024 Kawasaki Motors Corp., U.S.A.