2005 ZZR600 PARTS DIAGRAM

Headlight(s)

F2710

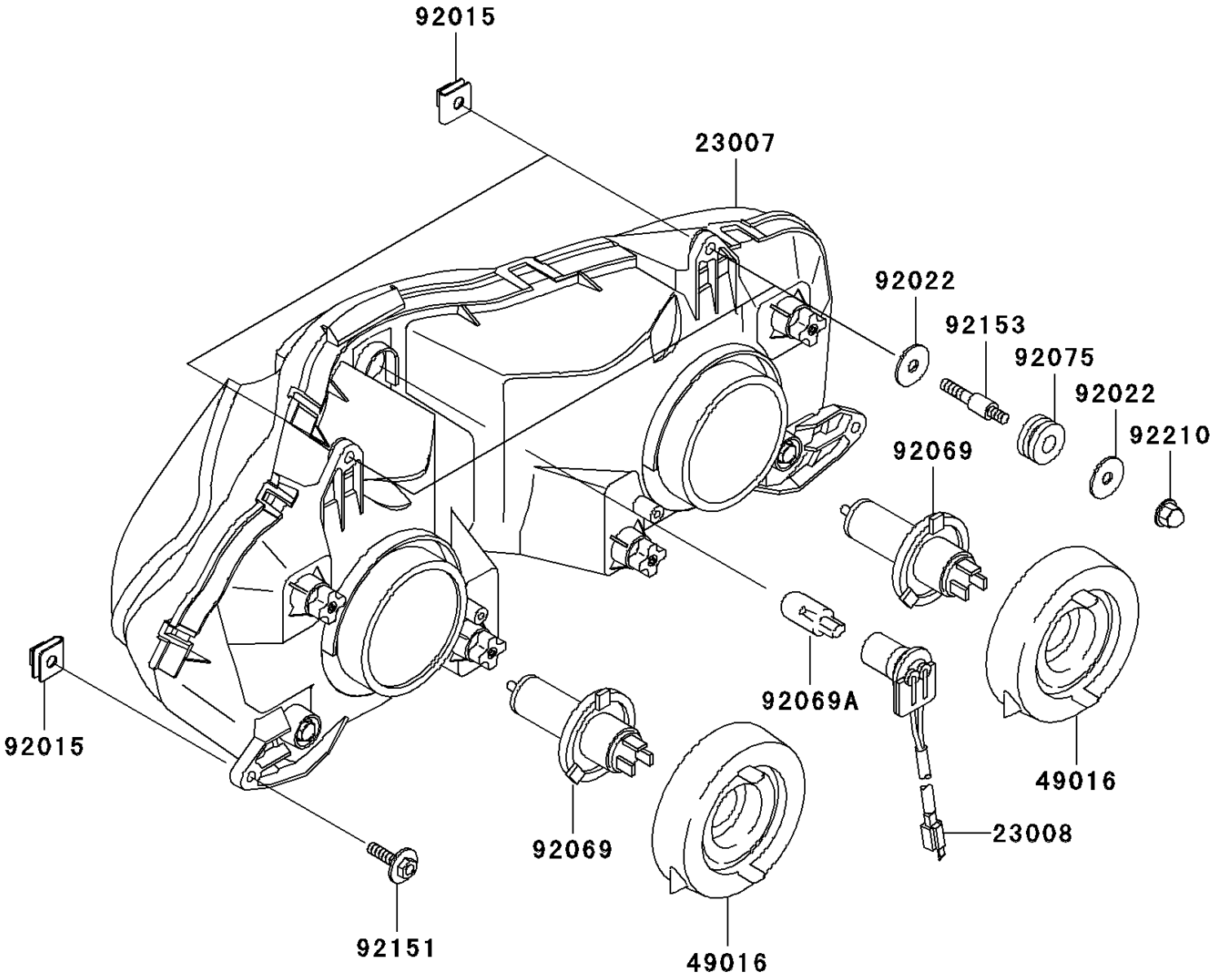

© 2024 Kawasaki Motors Corp., U.S.A.

2005 ZZR600 PARTS LIST

Headlight(s)

ITEM NAME	PART NUMBER	QUANTITY
LENS-COMP,HEAD LAMP (Ref # 23007)	23007-1378	1
SOCKET-ASSY,HEAD LAMP (Ref # 23008)	23008-1619	1
COVER-SEAL,HEAD LAMP (Ref # 49016)	49016-1193	2
NUT,6MM (Ref # 92015)	92015-1094	4
WASHER,7X24X1.6 (Ref # 92022)	92022-1160	4
BULB,12V 60/55W,H4 (Ref # 92069)	92069-1002	2
BULB,12V 5W (Ref # 92069A)	92069-1016	1
DAMPER (Ref # 92075)	92075-1690	2
BOLT,6X25 (Ref # 92151)	92151-1241	2
BOLT (Ref # 92153)	92153-1158	2
NUT,CAP,6MM (Ref # 92210)	92210-0003	2

© 2024 Kawasaki Motors Corp., U.S.A.