1998 Ninja® ZX™-6R PARTS DIAGRAM

Front Wheel

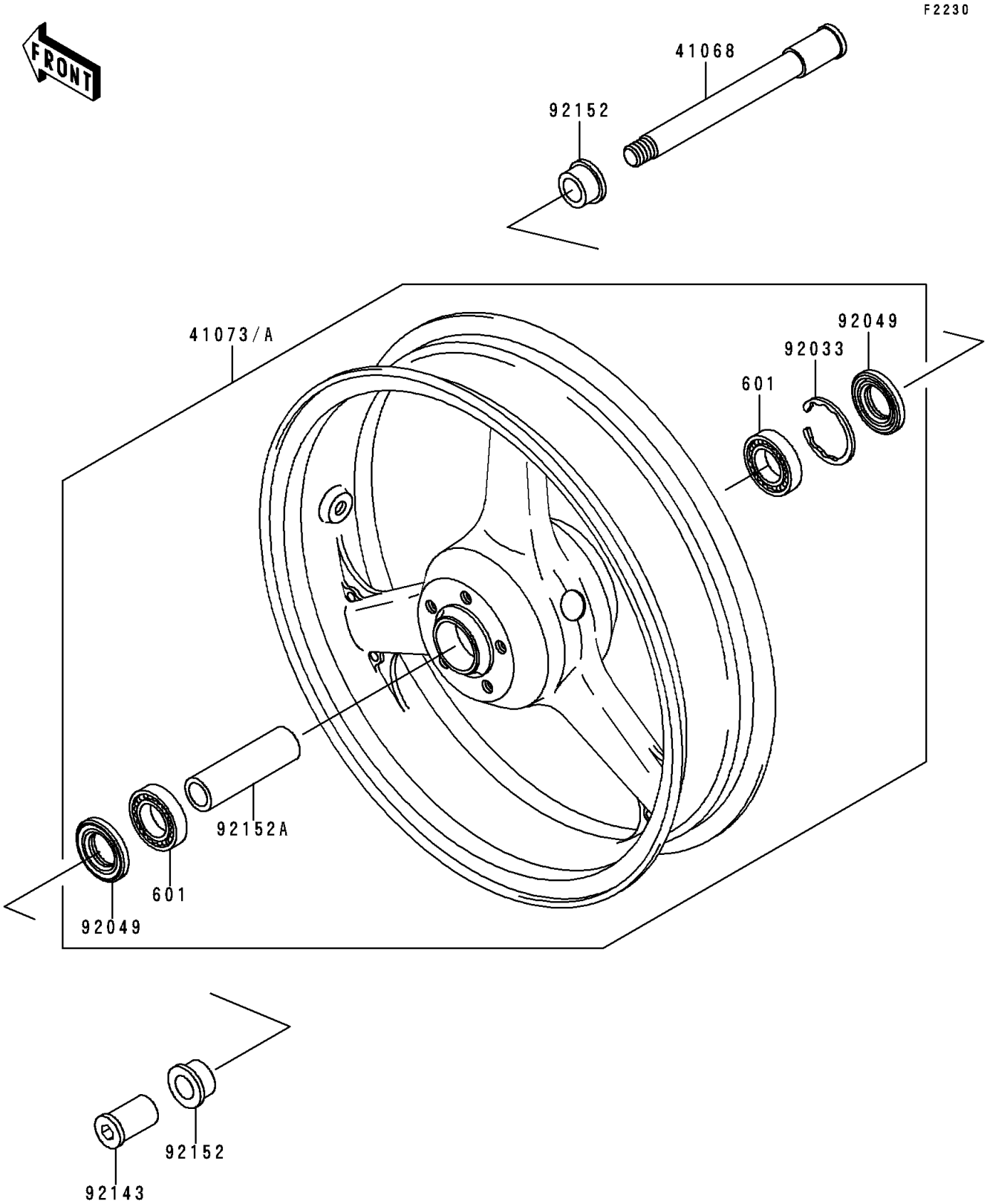

© 2024 Kawasaki Motors Corp., U.S.A.

1998 Ninja® ZX™-6R PARTS LIST

Front Wheel

ITEM NAME	PART NUMBER	QUANTITY
BEARING-BALL,#6005UU (Ref # 601)	601B6005UU	2
AXLE,FR (Ref # 41068)	41068-1404	1
WHEEL-ASSY,FR,L.GREEN (Ref # 41073)	41073-1633-CJ	1
WHEEL-ASSY,FR,C.GRAY (Ref # 41073A)	41073-1633-DH	1
RING-SNAP,47MM (Ref # 92033)	92033-1042	1
SEAL-OIL,BJN 32 47 5 (Ref # 92049)	92049-1377	2
COLLAR,FR AXLE,LH,L=44.5 (Ref # 92143)	92143-1478	1
COLLAR,FR AXLE,L=19 (Ref # 92152)	92152-1078	2
COLLAR,FR HUB,L=98 (Ref # 92152A)	92152-1079	1

© 2024 Kawasaki Motors Corp., U.S.A.