1995 Ninja® ZX™-6R PARTS DIAGRAM

Headlight(s)

F2710

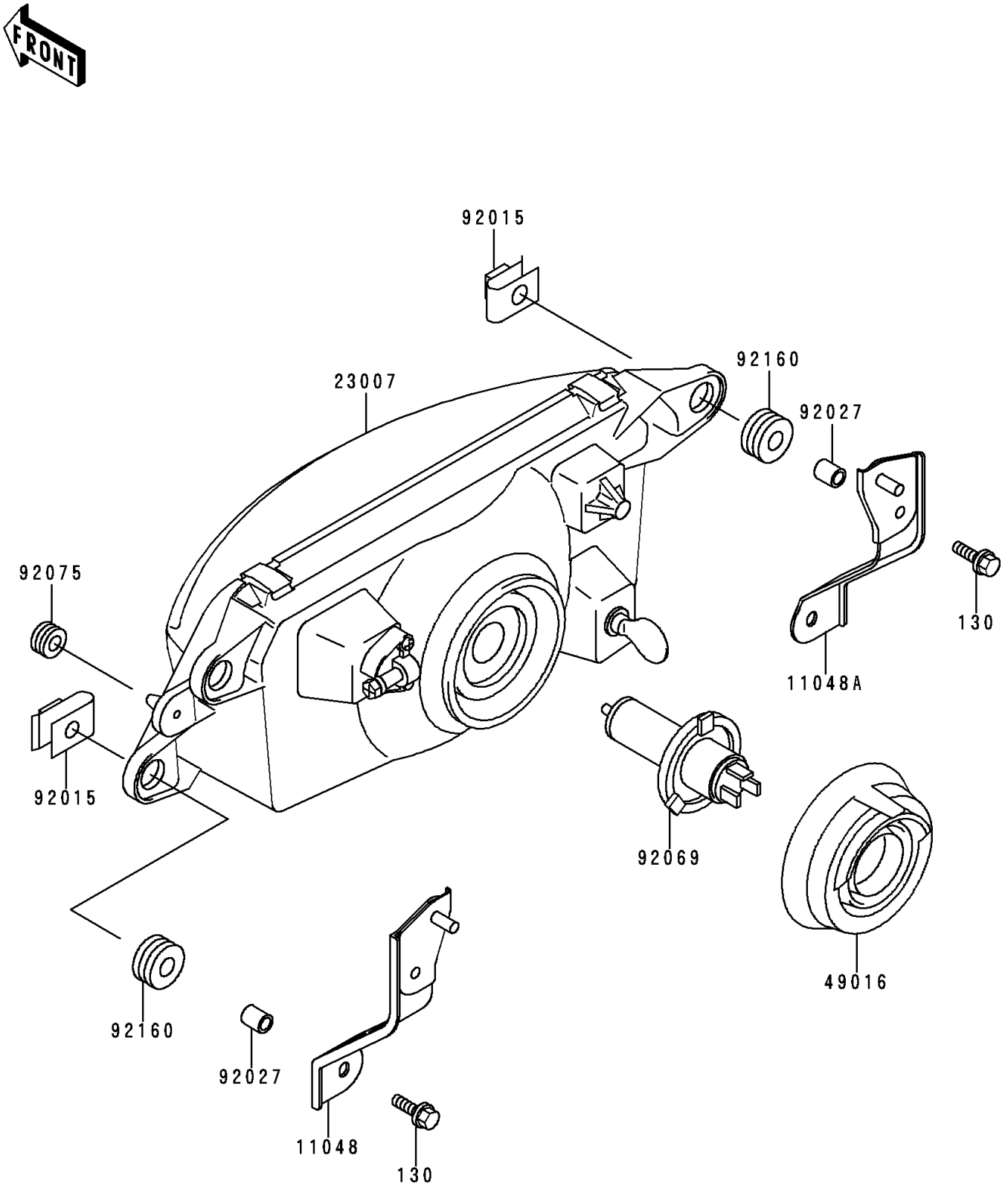

© 2024 Kawasaki Motors Corp., U.S.A.

1995 Ninja® ZX™-6R PARTS LIST

Headlight(s)

ITEM NAME	PART NUMBER	QUANTITY
BOLT-FLANGED,6X25 (Ref # 130)	130J0625	4
BRACKET,HEAD LAMP,LH (Ref # 11048)	11048-1895	1
BRACKET,HEAD LAMP,RH (Ref # 11048A)	11048-1896	1
LENS-COMP,HEAD LAMP (Ref # 23007)	23007-1312	1
COVER-SEAL,HEAD LAMP (Ref # 49016)	49016-1135	1
NUT,6MM (Ref # 92015)	92015-1094	4
COLLAR,6.8X10X12 (Ref # 92027)	92027-162	4
BULB,12V 60/55W,H4 (Ref # 92069)	92069-1002	1
DAMPER (Ref # 92075)	92075-1912	2
DAMPER (Ref # 92160)	92160-1162	4

© 2024 Kawasaki Motors Corp., U.S.A.