2002 Ninja® ZX™-6 PARTS DIAGRAM

Rear Wheel/Chain

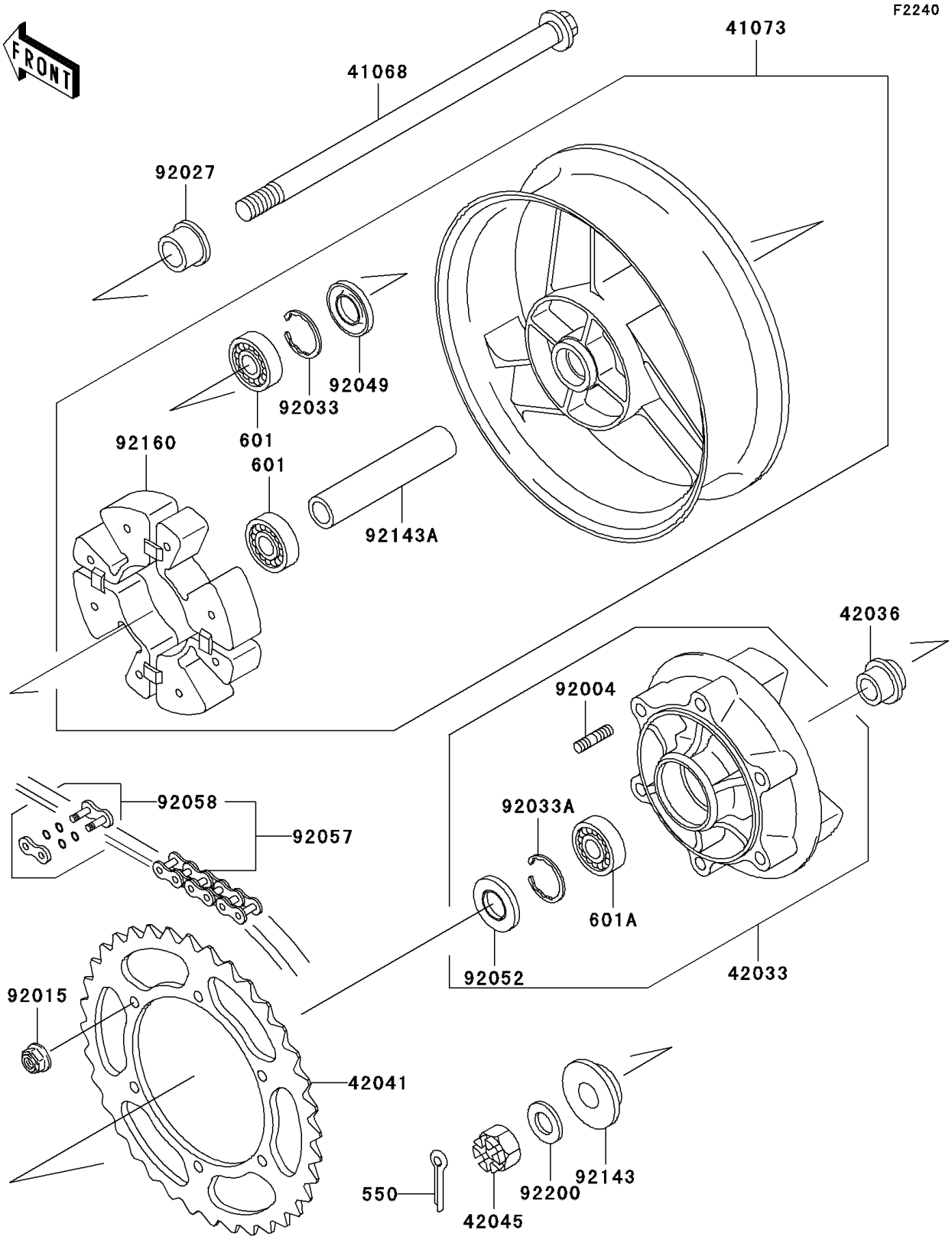

© 2024 Kawasaki Motors Corp., U.S.A.

2002 Ninja® ZX™-6 PARTS LIST

Rear Wheel/Chain

ITEM NAME	PART NUMBER	QUANTITY
PIN-COTTER,4.0X35 (Ref # 550)	550D4035	1
BEARING-BALL,6204UUC3 (Ref # 601)	601B6204UU	2
BEARING-BALL,#6205G (Ref # 601A)	601B6205G	1
AXLE,RR (Ref # 41068)	41068-1350	1
WHEEL-ASSY,RR,G.GRAY (Ref # 41073)	41073-1521-GE	1
COUPLING-ASSY,RR HUB (Ref # 42033)	42033-1214	1
SLEEVE,RR HUB,L=23 (Ref # 42036)	42036-1251	1
SPROCKET-HUB,48T (Ref # 42041)	42041-1362	1
NUT,CASTLE,18MM (Ref # 42045)	42045-018	1
STUD,10X19 (Ref # 92004)	92004-1275	6
NUT,FLANGED,10MM (Ref # 92015)	92015-1335	6
COLLAR,RR AXLE,L=21.5 (Ref # 92027)	92027-1902	1
RING-SNAP,47MM (Ref # 92033)	92033-1042	1
RING-SNAP,52MM (Ref # 92033A)	92033-1043	1
SEAL-OIL,BJN28475 (Ref # 92049)	92049-1056	1
SEAL-OIL,TWC35527 (Ref # 92052)	92052-006	1
CHAIN,DRIVE,EK50MV-XX112L (Ref # 92057)	92057-0002	1
JOINT-CHAIN,DRIVE (Ref # 92058)	92058-1098	1
COLLAR,RR AXLE,L=16 (Ref # 92143)	92143-1302	1
COLLAR,RR HUB,L=133 (Ref # 92143A)	92143-1303	1
DAMPER,SHOCK,RR HUB (Ref # 92160)	92160-1399	1
WASHER,19X32X2.6 (Ref # 92200)	92200-1489	1

© 2024 Kawasaki Motors Corp., U.S.A.