2002 Ninja® ZX™-6 PARTS DIAGRAM

Starter Motor

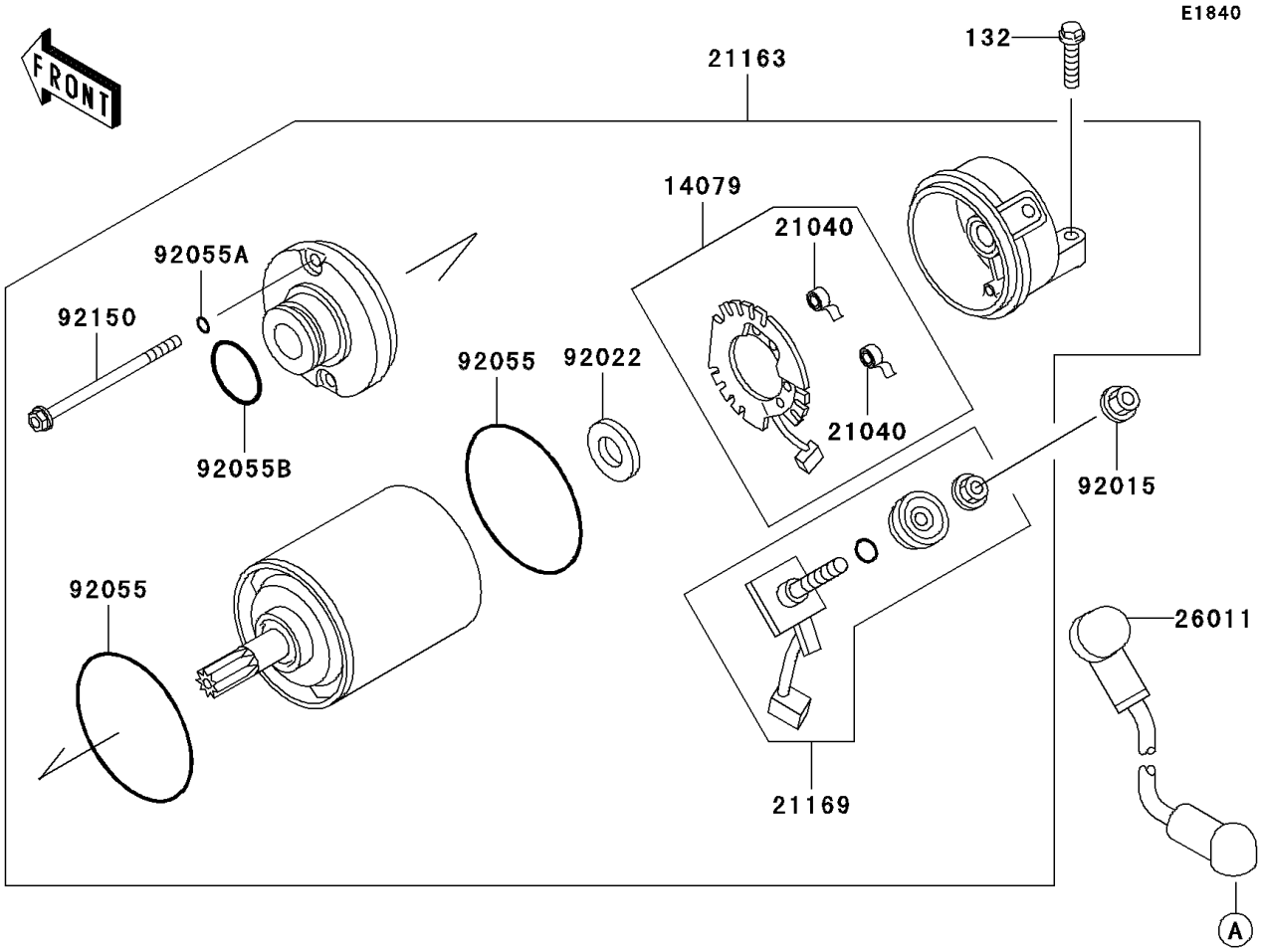

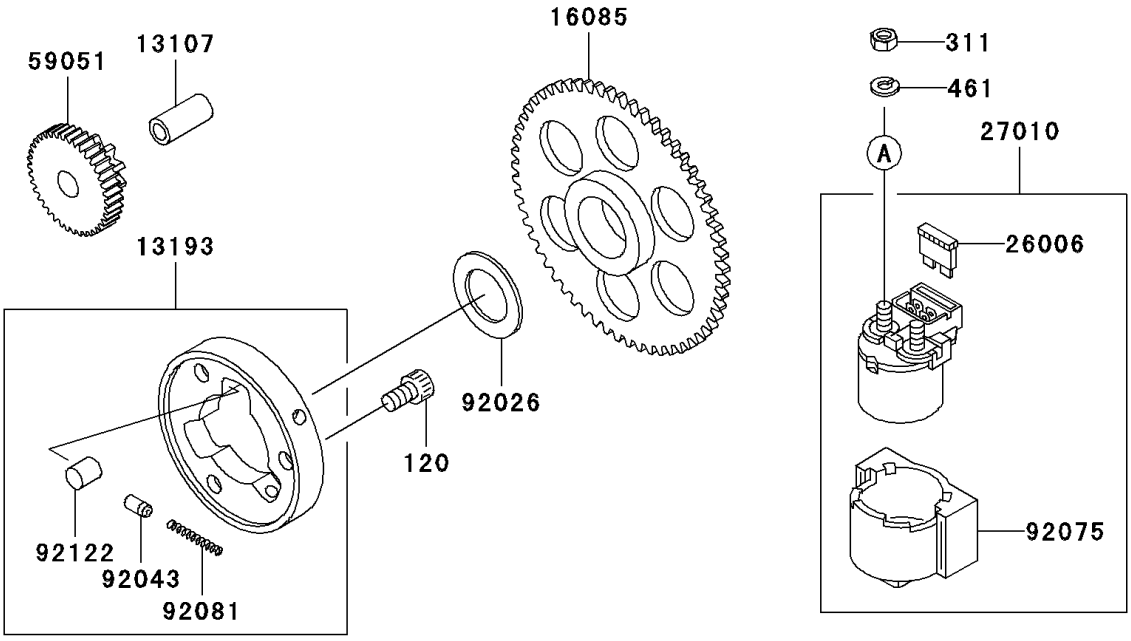

© 2024 Kawasaki Motors Corp., U.S.A.

2002 Ninja® ZX™-6 PARTS LIST

Starter Motor

ITEM NAME	PART NUMBER	QUANTITY

© 2024 Kawasaki Motors Corp., U.S.A.