2002 Ninja® ZX™-6 PARTS DIAGRAM

Cylinder/Piston(s)

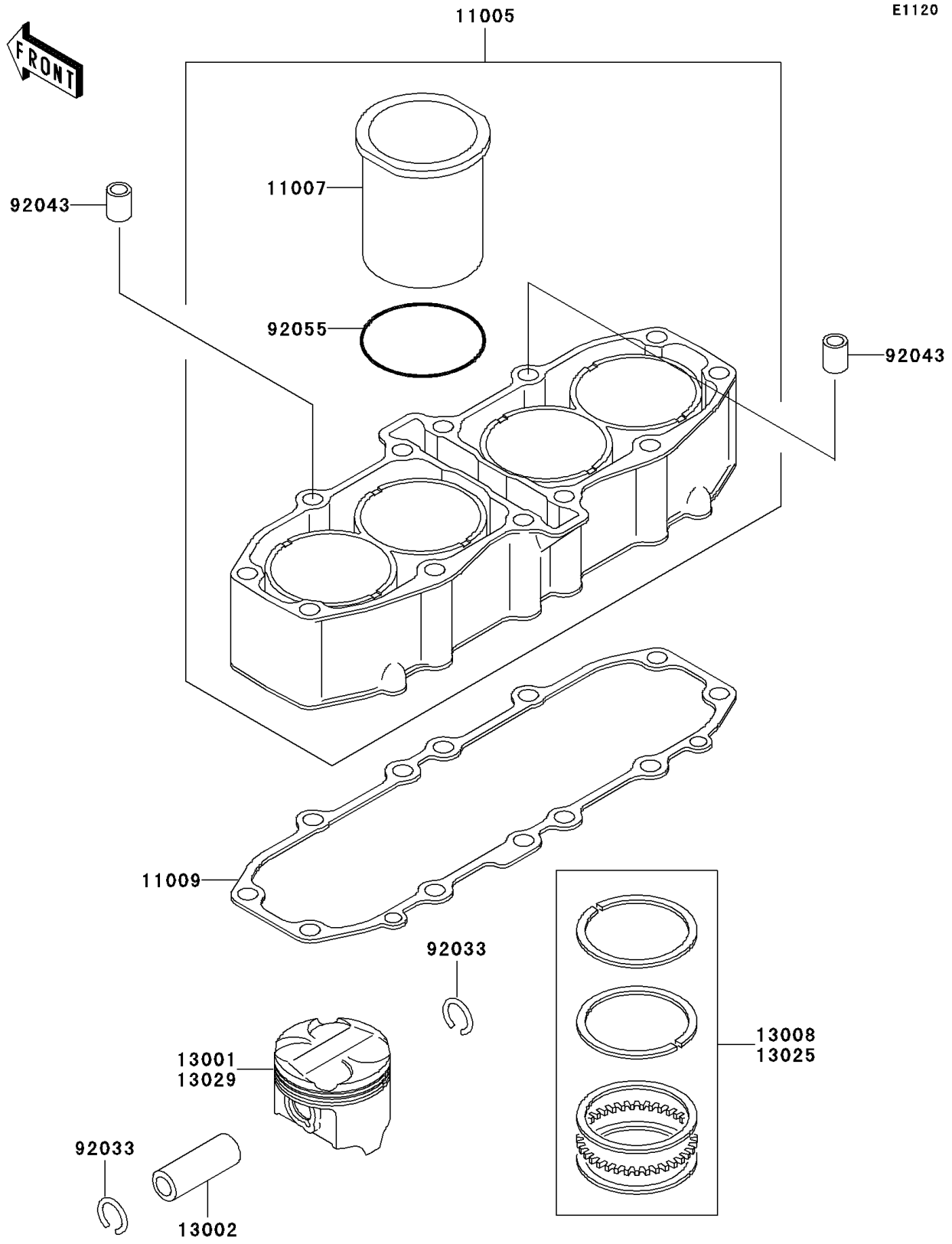

© 2024 Kawasaki Motors Corp., U.S.A.

2002 Ninja® ZX™-6 PARTS LIST

Cylinder/Piston(s)

ITEM NAME	PART NUMBER	QUANTITY
CYLINDER-ENGINE (Ref # 11005)	11005-1690	1
LINER-CYLINDER (Ref # 11007)	11007-1123	4
GASKET,CYLINDER BASE (Ref # 11009)	11009-1855	1
PISTON-ENGINE,STD (Ref # 13001)	13001-1384	4
PIN-PISTON (Ref # 13002)	13002-1115	4
RING-SET-PISTON,STD (Ref # 13008)	13008-1128	4
RING-SET-PISTON L,O/S 0.50 (Ref # 13025)	13025-1101	AR
PISTON-ENGINE L,O/S 0.50 (Ref # 13029)	13029-1214	AR
RING-SNAP,PISTON PIN (Ref # 92033)	92033-1161	8
PIN,10.1X12X14 (Ref # 92043)	92043-4009	2
RING-O,70.6X2.4 (Ref # 92055)	92055-1467	4

© 2024 Kawasaki Motors Corp., U.S.A.