1991 Ninja® ZX™-6

PARTS DIAGRAM

Frame Fitting

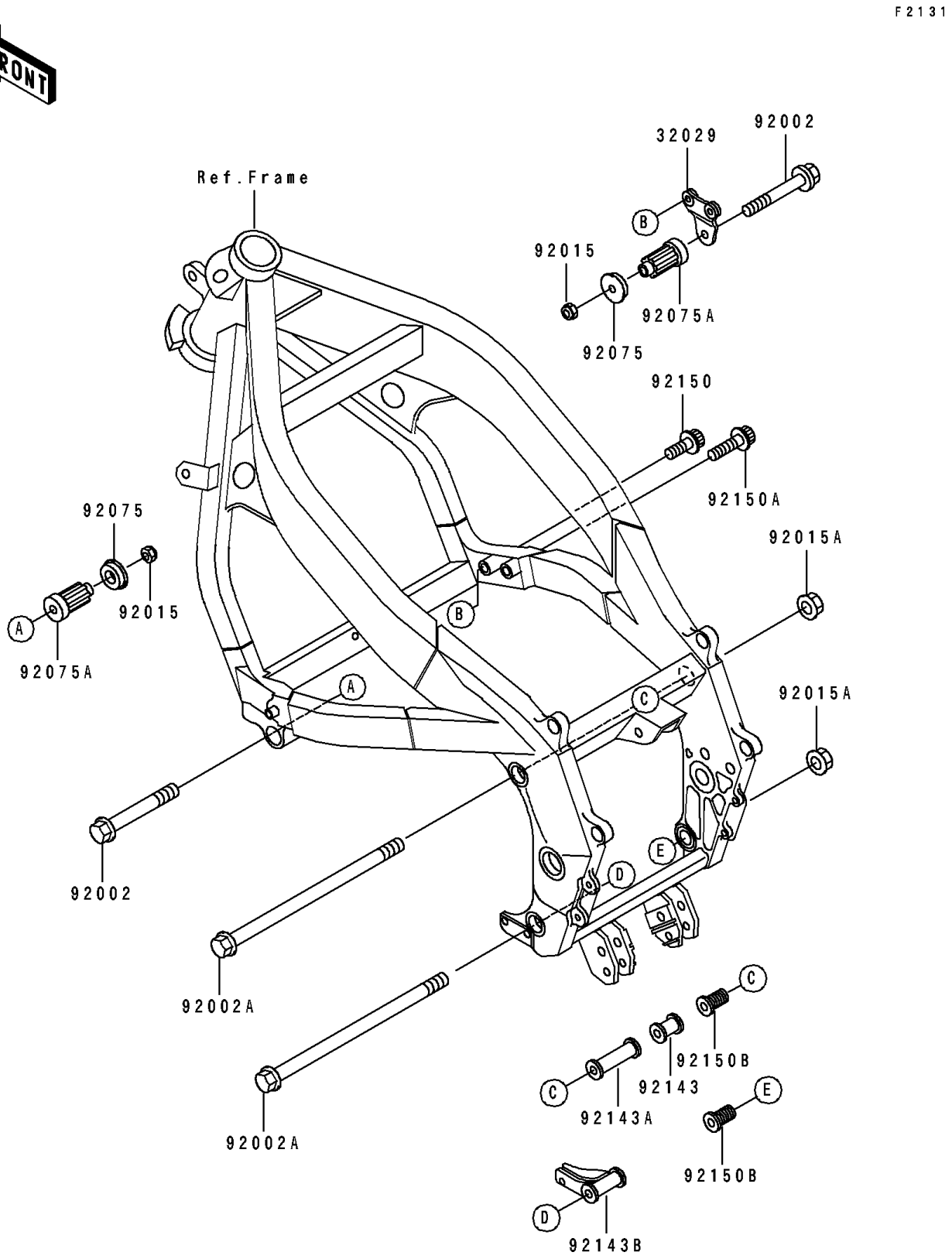

© 2026 Kawasaki Motors Corp., U.S.A.

1991 Ninja® ZX™-6

PARTS LIST

Frame Fitting

Kawasaki
Let the Good Times Roll®

ITEM NAME	PART NUMBER	QUANTITY

© 2026 Kawasaki Motors Corp., U.S.A.