2023 TERYX KRX®4 1000 eS

PARTS DIAGRAM

Bevel Gear

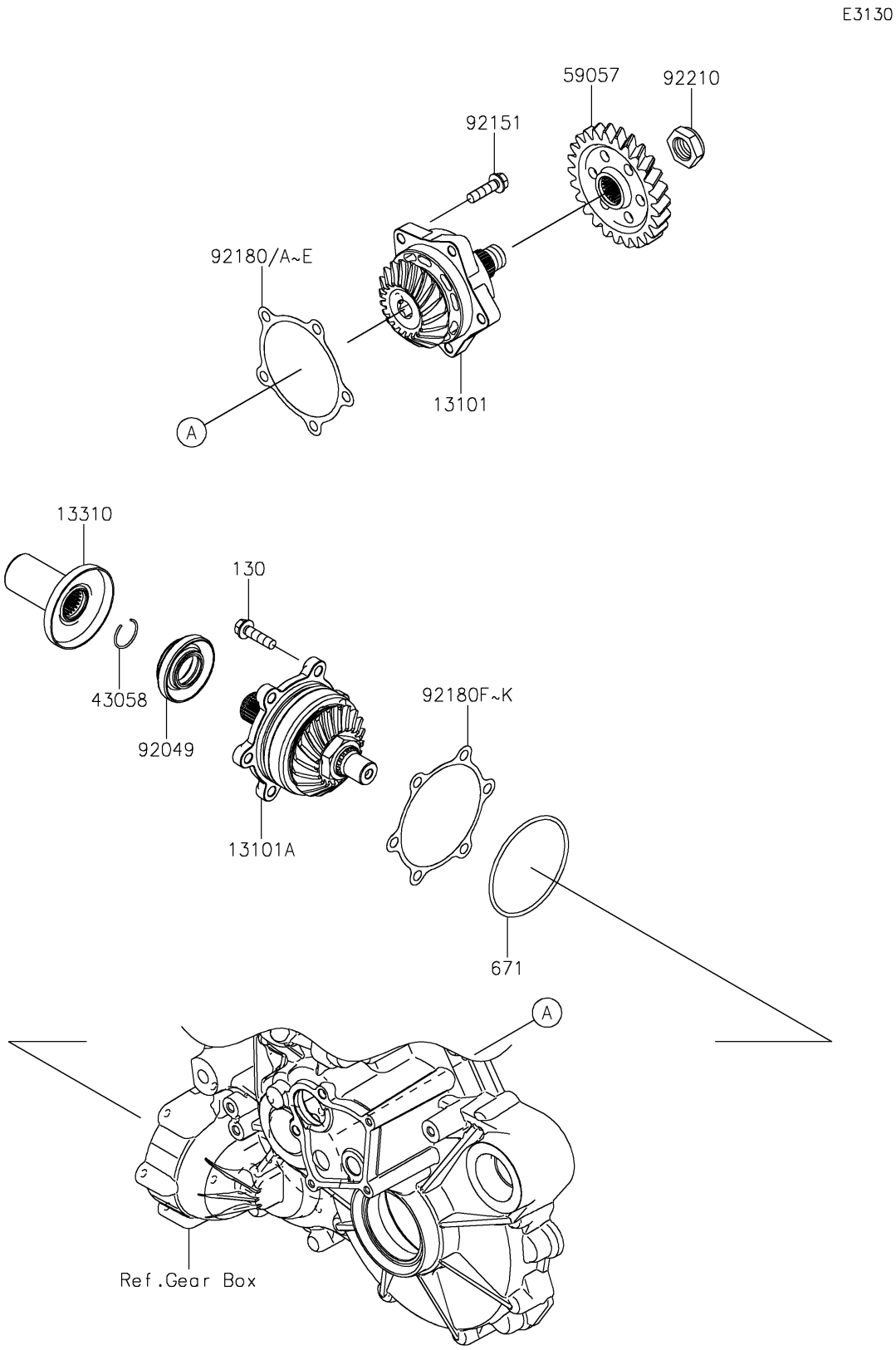

© 2026 Kawasaki Motors Corp., U.S.A.

2023 TERYX KRX®4 1000 eS

PARTS LIST

Bevel Gear

ITEM NAME	PART NUMBER	QUANTITY
GEAR-ASSY,DRIVE (Ref # 13101)	13101-0689	1
GEAR-ASSY,DRIVEN (Ref # 13101A)	13101-0690	1
SHAFT-ASSY (Ref # 13310)	13310-0044	1
RING (Ref # 43058)	43058-0018	1
GEAR-HELICAL (Ref # 59057)	59057-0034	1
SEAL-OIL (Ref # 92049)	92049-0160	1
BOLT,8X30 (Ref # 92151)	92151-1908	5
SHIM,DRIVE,T=0.15 (Ref # 92180)	92180-1543	AR
SHIM,DRIVE,T=0.20 (Ref # 92180A)	92180-1544	AR
SHIM,DRIVE,T=0.50 (Ref # 92180B)	92180-1545	AR
SHIM,DRIVE,T=0.80 (Ref # 92180C)	92180-1546	AR
SHIM,DRIVE,T=1.00 (Ref # 92180D)	92180-1547	AR
SHIM,DRIVE,T=1.20 (Ref # 92180E)	92180-1548	AR
SHIM,DRIVEN,T=0.15 (Ref # 92180F)	92180-1549	AR
SHIM,DRIVEN,T=0.20 (Ref # 92180G)	92180-1550	AR
SHIM,DRIVEN,T=0.50 (Ref # 92180H)	92180-1551	AR
SHIM,DRIVEN,T=0.80 (Ref # 92180I)	92180-1552	AR
SHIM,DRIVEN,T=1.00 (Ref # 92180J)	92180-1553	AR
SHIM,DRIVEN,T=1.20 (Ref # 92180K)	92180-1554	AR
NUT (Ref # 92210)	92210-1790	1
BOLT-FLANGED,8X30 (Ref # 130)	130BA0830	6
O RING (Ref # 671)	671D2585	1

© 2026 Kawasaki Motors Corp., U.S.A.