2023 TERYX KRX®4 1000 eS

PARTS DIAGRAM

Gear Box

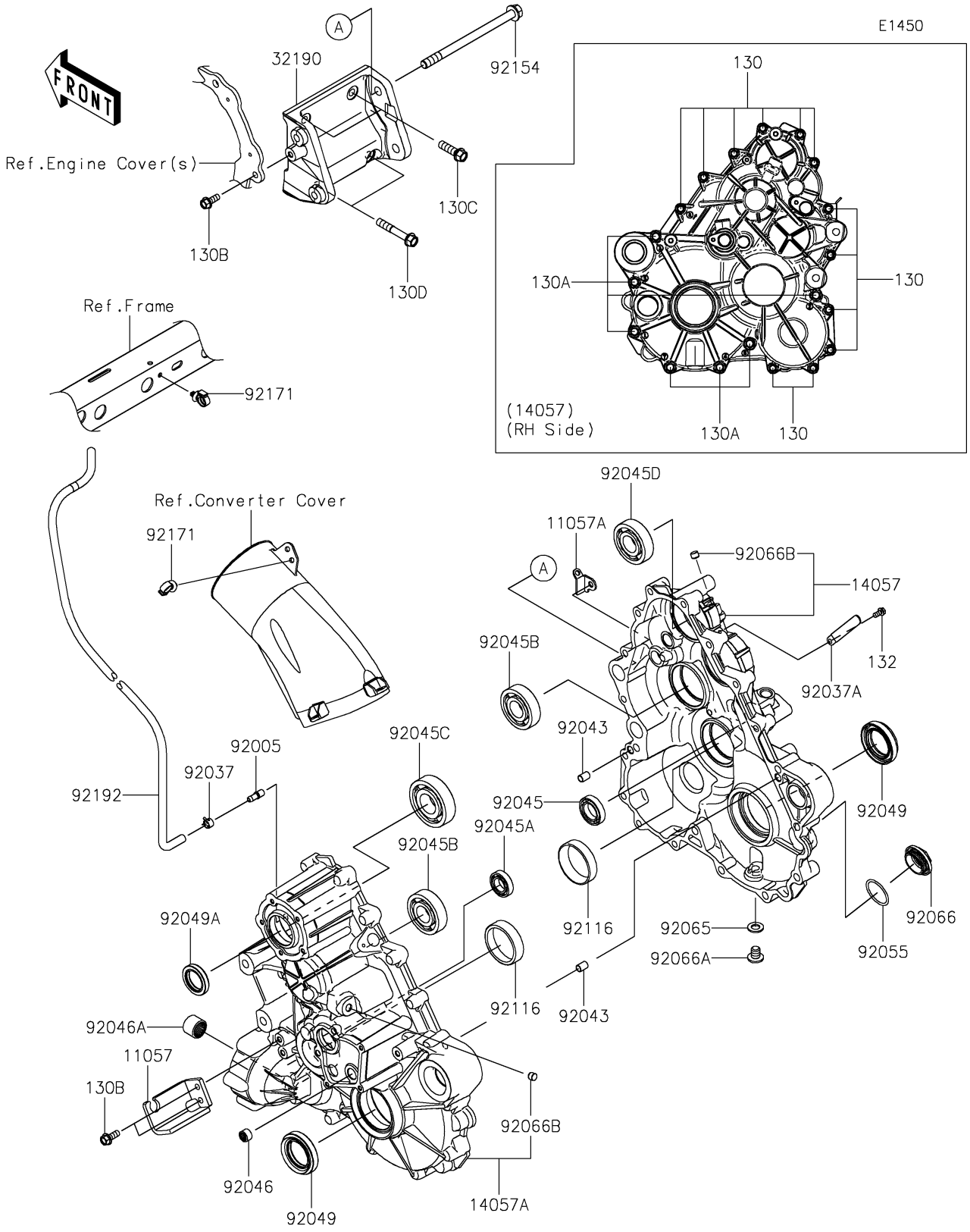

© 2026 Kawasaki Motors Corp., U.S.A.

2023 TERYX KRX®4 1000 eS

PARTS LIST

Gear Box

ITEM NAME	PART NUMBER	QUANTITY
BRACKET,CABLE (Ref # 11057)	11057-1898	1
BRACKET (Ref # 11057A)	11057-4094	1
CASE-COMP-GEAR (Ref # 14057)	14057-0023	1
CASE-COMP-GEAR (Ref # 14057A)	14057-0024	1
BRACKET-ENGINE (Ref # 32190)	32190-0776	1
FITTING,BREATHER (Ref # 92005)	92005-1127	1
CLAMP,TUBE (Ref # 92037)	92037-1505	1
CLAMP (Ref # 92037A)	92037-1993	1
PIN,DOWEL,10X14 (Ref # 92043)	92043-1037	2
BEARING-BALL,#6905 (Ref # 92045)	92045-036	1
BEARING-BALL,6904 (Ref # 92045A)	92045-0705	1
BEARING-BALL,6305RSH2 (Ref # 92045B)	92045-0899	2
BEARING-BALL,TMB306C3 (Ref # 92045C)	92045-0900	1
BEARING-BALL,6305 (Ref # 92045D)	92045-0947	1
BEARING-NEEDLE,HK1210FM (Ref # 92046)	92046-0034	1
BEARING-NEEDLE (Ref # 92046A)	92046-0039	1
SEAL-OIL,TC9Y 40X62X10X17.2 (Ref # 92049)	92049-0815	2
SEAL-OIL,HTC 30X45X8 (Ref # 92049A)	92049-0848	1
RING-O,35.8MM (Ref # 92055)	92055-1281	1
GASKET,12X22X2 (Ref # 92065)	92065-097	1
PLUG,36X7.5 (Ref # 92066)	92066-0744	1
PLUG,12X15 (Ref # 92066A)	92066-0943	1
PLUG (Ref # 92066B)	92066-1013	2
BEARING-ROLLER,HC30305J (Ref # 92116)	92116-0011	2
BOLT,12X175 (Ref # 92154)	92154-3859	2
CLAMP (Ref # 92171)	92171-0453	2
TUBE,5.8X10.8X935 (Ref # 92192)	92192-1921	1
BOLT-FLANGED,8X45 (Ref # 130)	130BA0845	12
BOLT-FLANGED,10X55 (Ref # 130A)	130BA1055	7

© 2026 Kawasaki Motors Corp., U.S.A.

2023 TERYX KRX®4 1000 eS

PARTS LIST

Gear Box

ITEM NAME	PART NUMBER	QUANTITY
BOLT-FLANGED,8X20 (Ref # 130B)	130CA0820	3
BOLT-FLANGED,10X35 (Ref # 130C)	130CA1035	2
BOLT-FLANGED,10X60 (Ref # 130D)	130CA1060	2
BOLT-FLANGED-SMALL,6X12 (Ref # 132)	132BA0612	1

© 2026 Kawasaki Motors Corp., U.S.A.