2009 Brute Force® 750 4x4i PARTS DIAGRAM

Rear Fender(s)

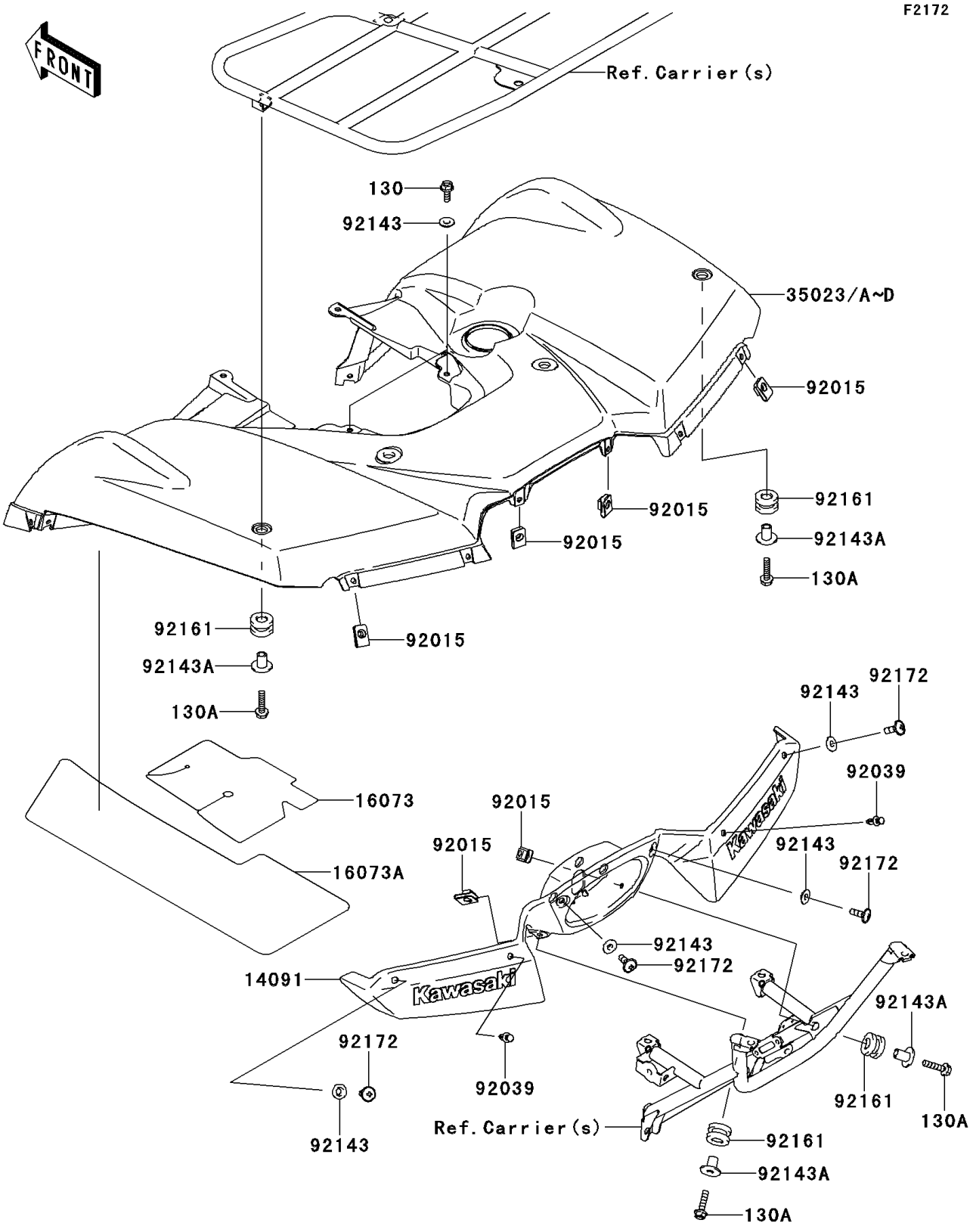

© 2024 Kawasaki Motors Corp., U.S.A.

2009 Brute Force® 750 4x4i PARTS LIST

Rear Fender(s)

ITEM NAME	PART NUMBER	QUANTITY
BOLT-FLANGED,6X16 (Ref # 130)	130BB0616	2
BOLT-FLANGED,6X25 (Ref # 130A)	130BB0625	4
COVER,TAIL LAMP,F.BLACK (Ref # 14091)	14091-0252-6Z	1
INSULATOR,REAR FENDER,INNER (Ref # 16073)	16073-0031	1
INSULATOR,REAR FENDER,OUTER (Ref # 16073A)	16073-0032	1
FENDER-REAR,D.R.RED (Ref # 35023)	35023-0050-16L	1
FENDER-REAR,W.GREEN (Ref # 35023A)	35023-0050-286	1
FENDER-REAR,L.GREEN (Ref # 35023B)	35023-0050-290	1
FENDER-REAR,S.RED (Ref # 35023C)	35023-0050-6B	1
FENDER-REAR,BLACK (Ref # 35023D)	35023-0050-839	1
NUT,6MM (Ref # 92015)	92015-1602	6
RIVET (Ref # 92039)	92039-1229	2
COLLAR (Ref # 92143)	92143-1087	6
COLLAR (Ref # 92143A)	92143-1960	4
DAMPER (Ref # 92161)	92161-0106	4
SCREW,6X18 (Ref # 92172)	92172-0002	4

© 2024 Kawasaki Motors Corp., U.S.A.