1995 Ninja® 600R PARTS DIAGRAM

Starter Motor

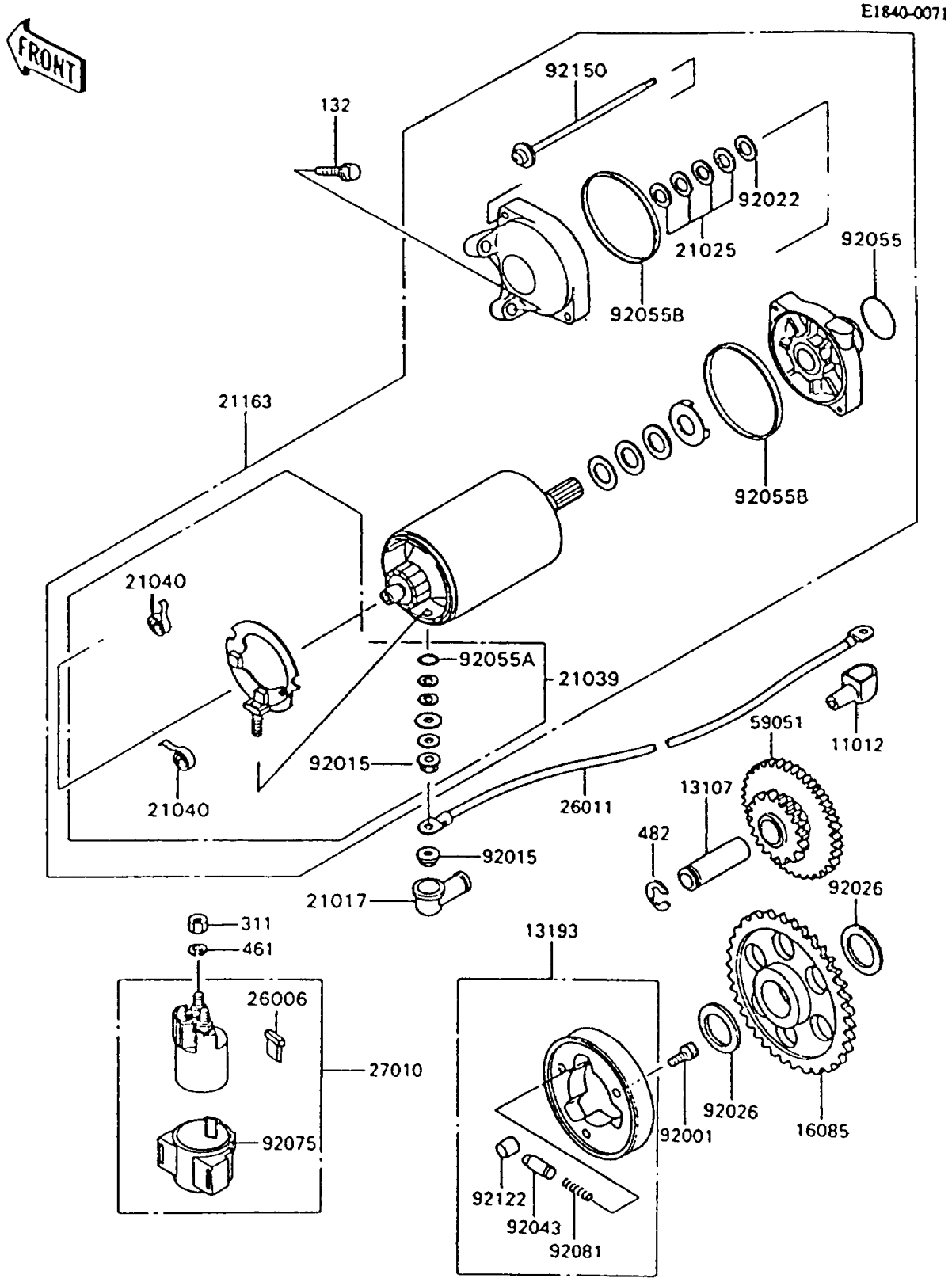

© 2024 Kawasaki Motors Corp., U.S.A.

1995 Ninja® 600R PARTS LIST

Starter Motor

ITEM NAME	PART NUMBER	QUANTITY
CAP,TERMINAL (Ref # 11012)	11012-1354	1
SHAFT,IDLE GEAR (Ref # 13107)	13107-1144	1
CLUTCH-ASSY-ONEWAY (Ref # 13193)	13193-1002	1
GEAR,ONEWAY CLUTCH (Ref # 16085)	16085-1030	1
GROMMET,STARTER TERMINAL (Ref # 21017)	21017-017	1
WASHER,9.1X18X0.2 (Ref # 21025)	21025-011	4
BRUSH,CARBON (Ref # 21039)	21039-1062	1
SPRING-BRUSH (Ref # 21040)	21040-1057	2
STARTER-ELECTRIC (Ref # 21163)	21163-1158	1
FUSE,30A-G (Ref # 26006)	26006-1006	1
WIRE-LEAD,STARTER MOTOR (Ref # 26011)	26011-1251	1
SWITCH,MAGNETIC (Ref # 27010)	27010-1213	1
GEAR-SPUR,IDLE (Ref # 59051)	59051-1138	1
BOLT,SOCKET,8X10 (Ref # 92001)	92001-1424	3
NUT,STARTER MOTOR (Ref # 92015)	92015-1476	2
WASHER,9.1X18X0.8 (Ref # 92022)	92022-1132	1
SPACER,25X36X3.2 (Ref # 92026)	92026-1025	2
PIN (Ref # 92043)	92043-132	3
RING-O (Ref # 92055)	92055-1276	1
RING-O,4.5X2.0 (Ref # 92055A)	92055-1370	1
RING-O,STARTER MOTOR (Ref # 92055B)	92055-1381	2
DAMPER,MAGNETIC SWITCH (Ref # 92075)	92075-1863	1
SPRING,COIL (Ref # 92081)	92081-159	3
ROLLER (Ref # 92122)	92122-006	3
BOLT (Ref # 92150)	92150-1243	2
BOLT-FLANGED-SMALL (Ref # 132)	132J0625	2
NUT-HEX,6MM (Ref # 311)	311B0600	2
WASHER-SPRING,6MM (Ref # 461)	461F0600	2
CIRCLIP-TYPE-E (Ref # 482)	482J0300	1

© 2024 Kawasaki Motors Corp., U.S.A.