2004 Ninja® ZX™-12R PARTS DIAGRAM

Side Covers/Chain Cover

F2610

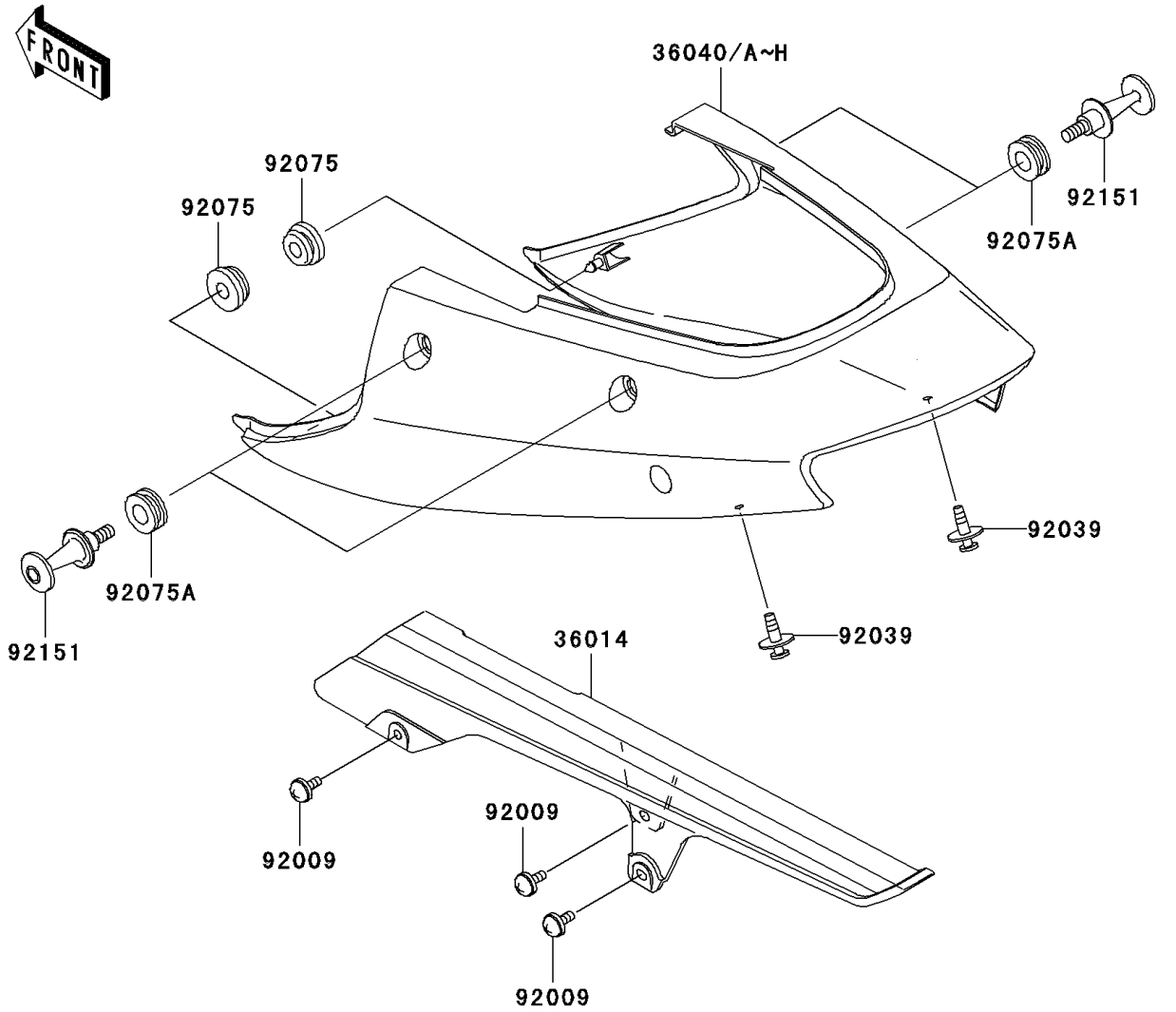

(36040/A~H) 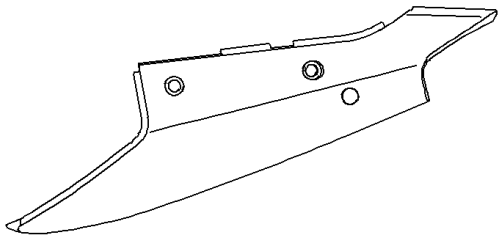	'02	(36040A)	Black
		(36040B)	Red
		(36040C)	Blue
	'03	(36040)	Red
		(36040D)	Silver
		(36040G)	Green
	'04	(36040C)	Blue
		(36040E)	Silver
		(36040F)	Black
	'05	(36040F)	Black
		(36040H)	Blue

WOD

© 2026 Kawasaki Motors Corp., U.S.A.

2004 Ninja® ZX™-12R PARTS LIST

Side Covers/Chain Cover

ITEM NAME	PART NUMBER	QUANTITY

© 2026 Kawasaki Motors Corp., U.S.A.