2024 NINJA® ZX™-10R

PARTS DIAGRAM

Cables

F2540

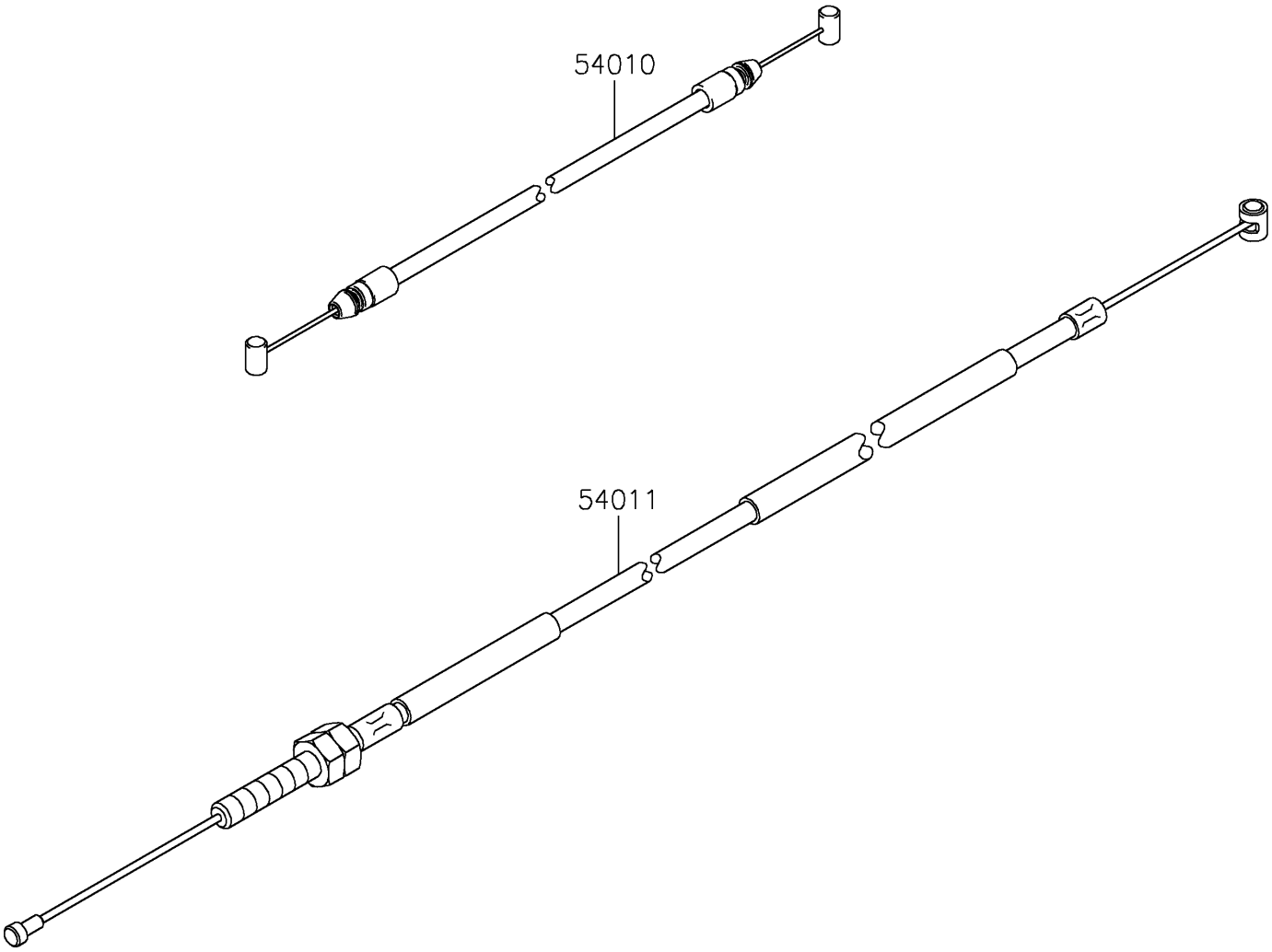

© 2026 Kawasaki Motors Corp., U.S.A.

2024 NINJA® ZX™-10R

PARTS LIST

Cables

ITEM NAME	PART NUMBER	QUANTITY
CABLE,SEAT LOCK (Ref # 54010)	54010-0029	1
CABLE-CLUTCH (Ref # 54011)	54011-0658	1

© 2026 Kawasaki Motors Corp., U.S.A.