2024 Z H2 SE PARTS DIAGRAM

Crankshaft/Piston(s)

E1320

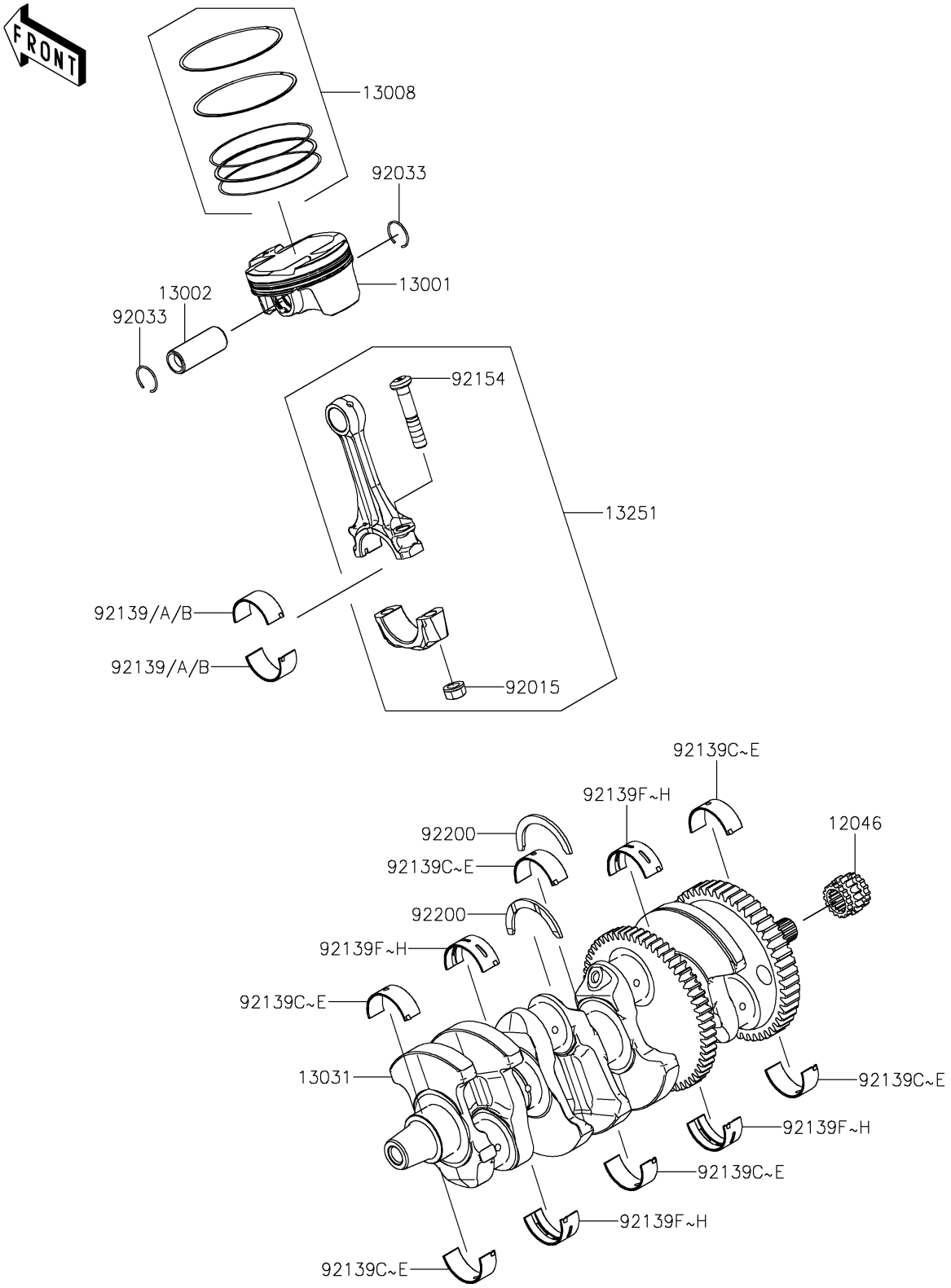

© 2025 Kawasaki Motors Corp., U.S.A.

2024 Z H2 SE PARTS LIST

Crankshaft/Piston(s)

ITEM NAME	PART NUMBER	QUANTITY
SPROCKET,16T (Ref # 12046)	12046-0033	1
PISTON-ENGINE (Ref # 13001)	13001-0794	4
PIN-PISTON (Ref # 13002)	13002-0043	4
RING-SET-PISTON (Ref # 13008)	13008-0578	4
CRANKSHAFT-COMP (Ref # 13031)	13031-0953	1
ROD-ASSY-CONNECTING,I (Ref # 13251)	13251-0740-II	4
NUT,CONNECTING ROD (Ref # 92015)	92015-1559	8
RING-SNAP,20.5X1.2 (Ref # 92033)	92033-1099	8
BUSHING,CON-ROD,BLUE (Ref # 92139)	92139-0818	8
BUSHING,CON-ROD,BLACK (Ref # 92139A)	92139-0819	AR
BUSHING,CON-ROD,BROWN (Ref # 92139B)	92139-0820	AR
BUSHING,#1&#3&#5,YELLOW (Ref # 92139C)	92139-0891	6
BUSHING,#1&#3&#5,GREEN (Ref # 92139D)	92139-0892	AR
BUSHING,#1&#3&#5,PINK (Ref # 92139E)	92139-0893	AR
BUSHING,#2&#4,YELLOW (Ref # 92139F)	92139-0894	4
BUSHING,#2&#4,GREEN (Ref # 92139G)	92139-0895	AR
BUSHING,#2&#4,PINK (Ref # 92139H)	92139-0896	AR
BOLT,CON-ROD,9X47.5 (Ref # 92154)	92154-3883	8
WASHER,T=2.5 (Ref # 92200)	92200-0744	2

© 2025 Kawasaki Motors Corp., U.S.A.