1999 Ninja® ZX™-11 PARTS DIAGRAM

Ignition System

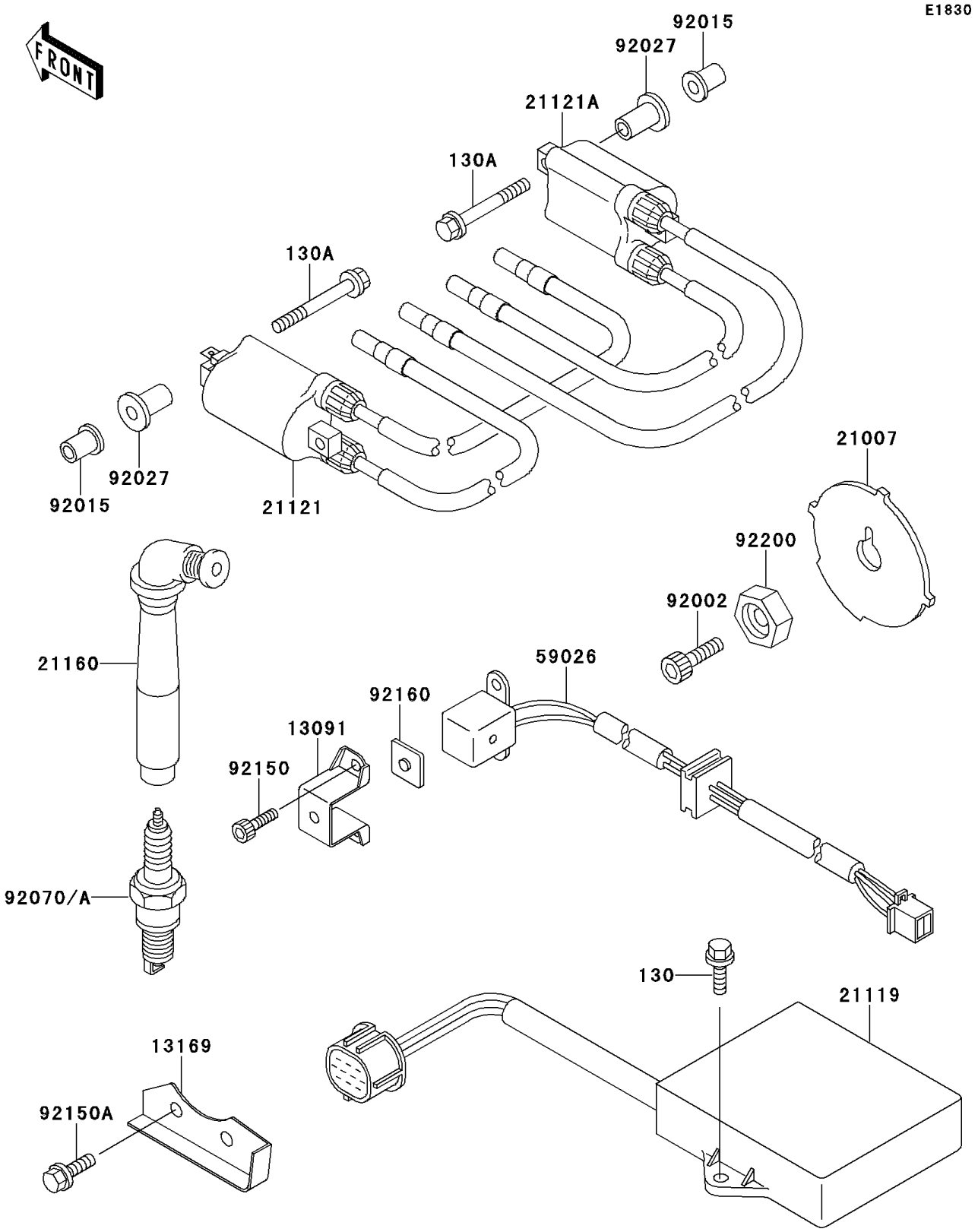

© 2024 Kawasaki Motors Corp., U.S.A.

1999 Ninja® ZX™-11 PARTS LIST

Ignition System

ITEM NAME	PART NUMBER	QUANTITY
BOLT-FLANGED,6X12 (Ref # 130)	130G0612	2
BOLT-FLANGED,6X45 (Ref # 130A)	130G0645	4
HOLDER (Ref # 13091)	13091-1562	1
PLATE,CHAIN GUIDE (Ref # 13169)	13169-1748	1
ROTOR,PULSING (Ref # 21007)	21007-1214	1
IGNITER (Ref # 21119)	21119-1386	1
COIL-IGNITION,#1&#4 (Ref # 21121)	21121-1220	1
COIL-IGNITION,#2&#3 (Ref # 21121A)	21121-1221	1
CAP-ASSY-PLUG (Ref # 21160)	21160-1098	4
COIL-PULSING (Ref # 59026)	59026-1118	1
BOLT,SOCKET,8X25 (Ref # 92002)	92002-1442	1
NUT (Ref # 92015)	92015-1700	4
COLLAR,L=21 (Ref # 92027)	92027-195	4
PLUG-SPARK,U27ESR-N(ND) (Ref # 92070)		4
PLUG-SPARK,CR9E(NGK) (Ref # 92070A)	92070-1266	4
BOLT,SOCKET,5X14 (Ref # 92150)	92150-1180	2
BOLT,6X12 (Ref # 92150A)	92150-1841	2
DAMPER (Ref # 92160)	92160-1091	1
WASHER,ROTOR (Ref # 92200)	92200-1173	1

© 2024 Kawasaki Motors Corp., U.S.A.