2024 KLX110

PARTS DIAGRAM

Footrests

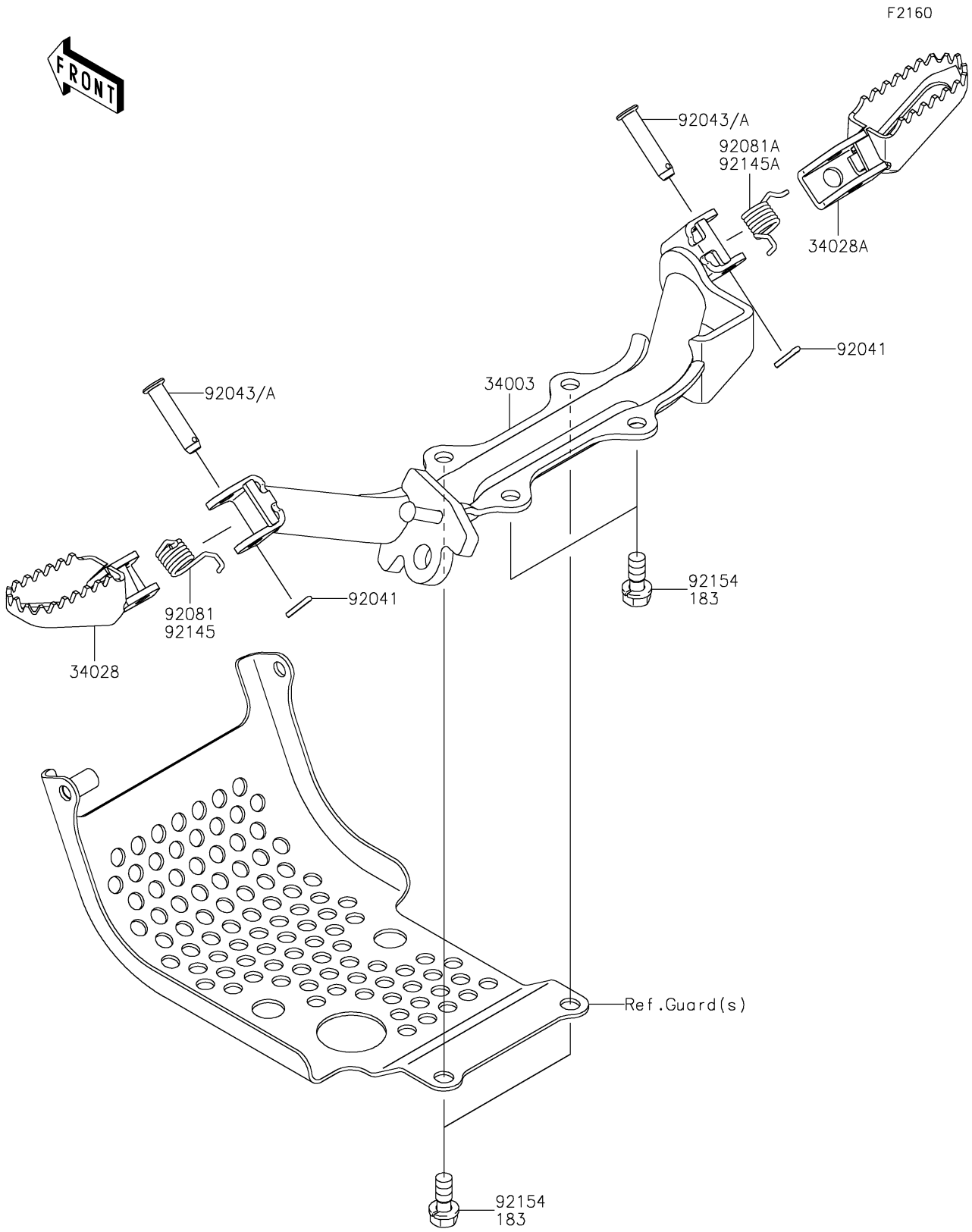

© 2026 Kawasaki Motors Corp., U.S.A.

2024 KLX110

PARTS LIST

Footrests

ITEM NAME	PART NUMBER	QUANTITY
HOLDER-STEP,P.SILVER (Ref # 34003)	34003-0107-458	1
STEP,LH (Ref # 34028)	34028-1237	1
STEP,RH (Ref # 34028A)	34028-1238	1
COTTER,2.5X15 (Ref # 92041)	92041-1051	2
PIN,8X32 (Ref # 92043)	92043-1143	2
PIN,8X32 (Ref # 92043A)	92043-1799	2
SPRING,FOOTREST,LH (Ref # 92081)	92081-1491	1
SPRING,FOOTREST,RH (Ref # 92081A)	92081-1543	1
SPRING,FOOTREST,LH (Ref # 92145)	92145-2309	1
SPRING,FOOTREST,RH (Ref # 92145A)	92145-2310	1
BOLT,8X20 (Ref # 92154)	92154-2487	4
BOLT-UPSET-WS-SMALL,8X20 (Ref # 183)	183BA0820	4

© 2026 Kawasaki Motors Corp., U.S.A.