# 1991 Ninja® ZX™-11 PARTS DIAGRAM

Cylinder/Piston

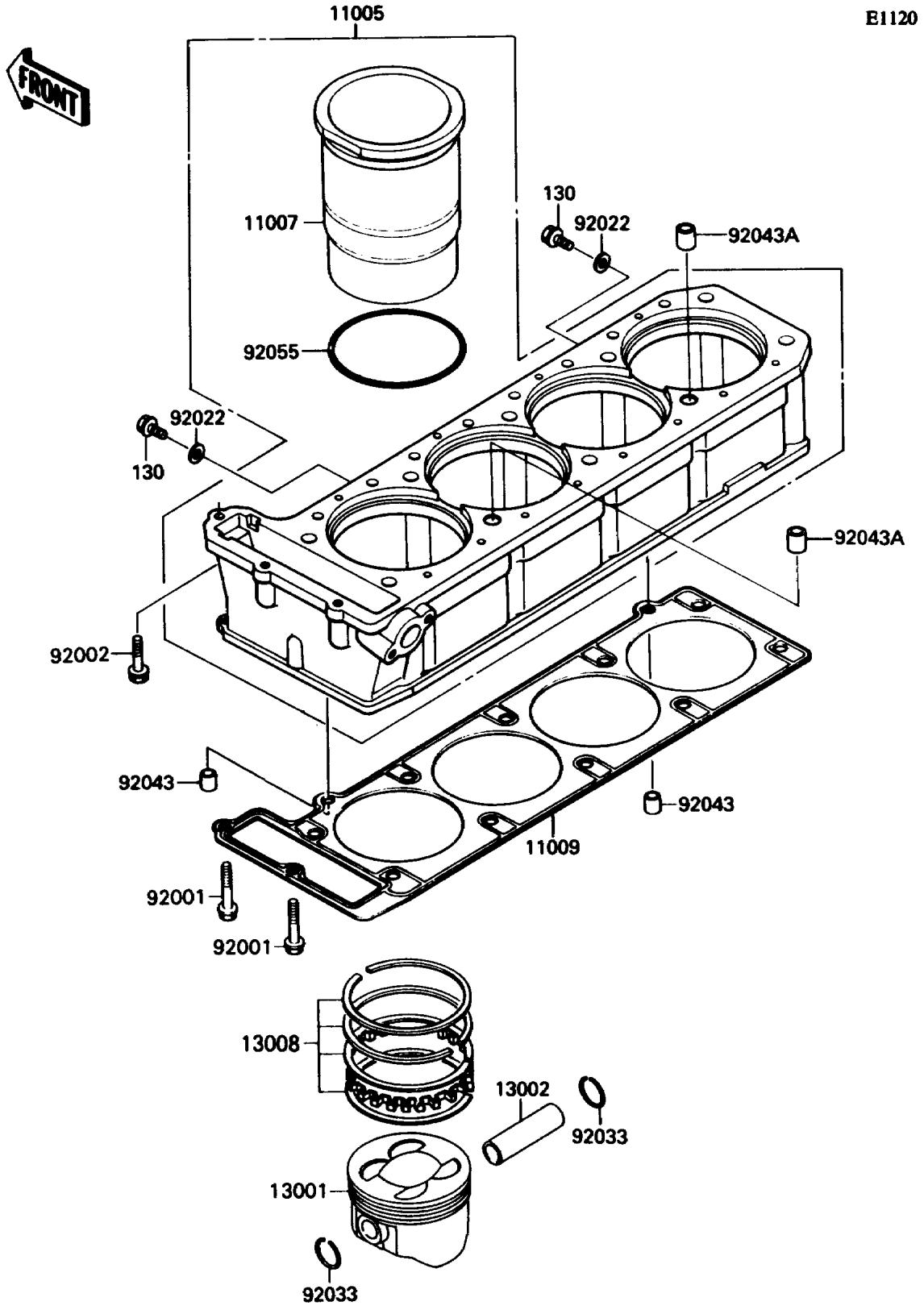


© 2026 Kawasaki Motors Corp., U.S.A.

# 1991 Ninja® ZX™-11 PARTS LIST

Cylinder/Piston

| ITEM NAME | PART NUMBER | QUANTITY |
|---|---|---|
| CYLINDER-ENGINE (Ref # 11005) | 11005-1615 | 1 |
| LINER-CYLINDER (Ref # 11007) | 11007-1114 | 4 |
| GASKET,CYLINDER BASE (Ref # 11009) | 11009-1847 | 1 |
| PISTON-ENGINE,STD (Ref # 13001) | 13001-1342 | 4 |
| PIN-PISTON (Ref # 13002) | 13002-1058 | 4 |
| RING-SET-PISTON,STD (Ref # 13008) | 13008-1127 | 4 |
| BOLT,6X38 (Ref # 92001) | 92001-1899 | 2 |
| BOLT,6X30 (Ref # 92002) | 92002-1138 | 1 |
| WASHER,6.2X11X1 (Ref # 92022) | 92022-304 | 2 |
| RING-SNAP,20.5X1.2 (Ref # 92033) | 92033-1099 | 8 |
| PIN,8.2X10X14 (Ref # 92043) | 92043-1264 | 2 |
| PIN,11.5X14X14 (Ref # 92043A) | 92043-1279 | 2 |
| RING-O,82.6X2.4 (Ref # 92055) | 92055-1465 | 4 |
| BOLT-FLANGED,6X10,BLACK (Ref # 130) | 130C0610 | 2 |

© 2026 Kawasaki Motors Corp., U.S.A.