2023 Ninja® ZX-10R ABS KRT Edition

Kawasaki
Let the Good Times Roll®

PARTS DIAGRAM

Crankcase

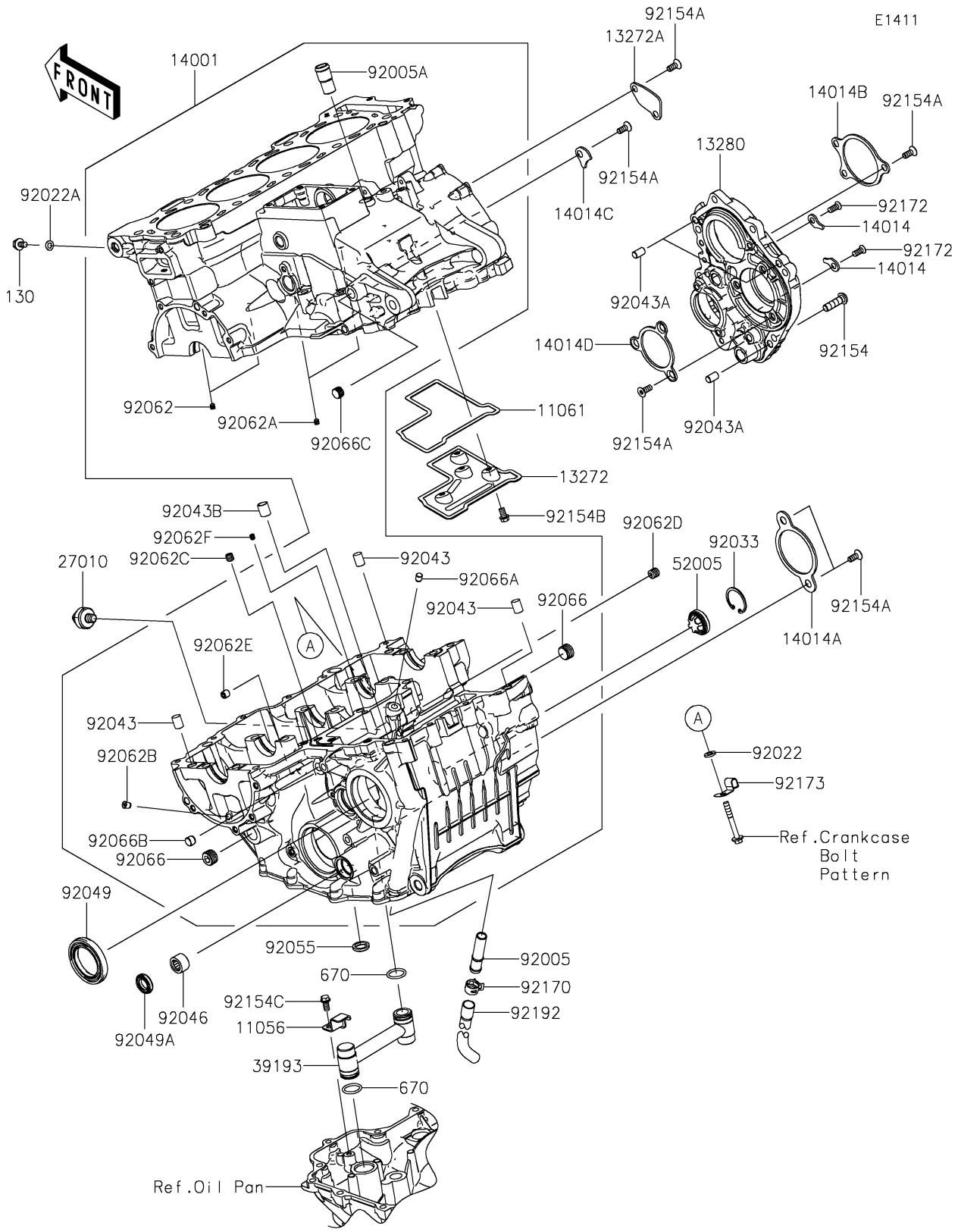

© 2026 Kawasaki Motors Corp., U.S.A.

2023 Ninja® ZX-10R ABS KRT Edition

Kawasaki
Let the Good Times Roll®

PARTS LIST

Crankcase

ITEM NAME	PART NUMBER	QUANTITY
BRACKET,OIL PIPE (Ref # 11056)	11056-0189	1
GASKET,BREATHER ROOM (Ref # 11061)	11061-0435	1
PLATE,BREATHER ROOM (Ref # 13272)	13272-0886	1
PLATE (Ref # 13272A)	13272-0887	1
HOLDER,TRANSMISSION (Ref # 13280)	13280-0859	1
SET-CRANKCASE (Ref # 14001)	14001-0729	1
PLATE-POSITION (Ref # 14014)	14014-0042	2
PLATE-POSITION (Ref # 14014A)	14014-0044	1
PLATE-POSITION (Ref # 14014B)	14014-0046	1
PLATE-POSITION (Ref # 14014C)	14014-0559	1
PLATE-POSITION (Ref # 14014D)	14014-0560	1
SWITCH,OIL PRESSURE (Ref # 27010)	27010-1313	1
PIPE-OIL (Ref # 39193)	39193-0061	1
GAUGE (Ref # 52005)	52005-1120	1
FITTING (Ref # 92005)	92005-0126	1
FITTING,BREATHER (Ref # 92005A)	92005-1238	1
WASHER,6.5X13X2.0 (Ref # 92022)	92022-1523	1
WASHER,6.2X11X1 (Ref # 92022A)	92022-304	1
RING-SNAP (Ref # 92033)	92033-1305	1
PIN,10X14 (Ref # 92043)	92043-1506	3
PIN,8X14 (Ref # 92043A)	92043-1567	3
PIN,10.1X12X14 (Ref # 92043B)	92043-4009	1
BEARING-NEEDLE,HK1412FM (Ref # 92046)	92046-0043	1
SEAL-OIL,TC38 57 8 (Ref # 92049)	92049-0068	1
SEAL-OIL,TC14245 (Ref # 92049A)	92049-1520	1
RING-O (Ref # 92055)	92055-0211	1
NOZZLE (Ref # 92062)	92062-0004	2
NOZZLE (Ref # 92062A)	92062-0010	2
NOZZLE (Ref # 92062B)	92062-0012	1

© 2026 Kawasaki Motors Corp., U.S.A.

2023 Ninja® ZX-10R ABS KRT Edition

Kawasaki
Let the Good Times Roll®

PARTS LIST

Crankcase

ITEM NAME	PART NUMBER	QUANTITY
NOZZLE,8X8 (Ref # 92062C)	92062-0020	1
NOZZLE,10X10 (Ref # 92062D)	92062-0021	1
NOZZLE (Ref # 92062E)	92062-0574	1
NOZZLE,6X8,SILVER (Ref # 92062F)	92062-1081	1
PLUG (Ref # 92066)	92066-0839	2
PLUG,OIL LINE,7.2X8 (Ref # 92066A)	92066-1012	1
PLUG (Ref # 92066B)	92066-1013	1
PLUG (Ref # 92066C)	92066-1110	1
BOLT,TORX,8X28 (Ref # 92154)	92154-0415	8
BOLT,TORX,6X11.7 (Ref # 92154A)	92154-1821	11
BOLT,FLANGED,6X10 (Ref # 92154B)	92154-1887	4
BOLT,FLANGED-SMALL,6X12 (Ref # 92154C)	92154-1888	1
CLAMP (Ref # 92170)	92170-1938	1
SCREW,TORX,6X14 (Ref # 92172)	92172-0961	2
CLAMP (Ref # 92173)	92173-2446	1
TUBE,10.5X13X80 (Ref # 92192)	92192-0985	1
BOLT-FLANGED,6X10 (Ref # 130)	130BD0610	1
O RING,18MM (Ref # 670)	670D2018	2

© 2026 Kawasaki Motors Corp., U.S.A.