1989 Ninja® ZX™-10 PARTS DIAGRAM

Carburetor Parts

E1612-0122

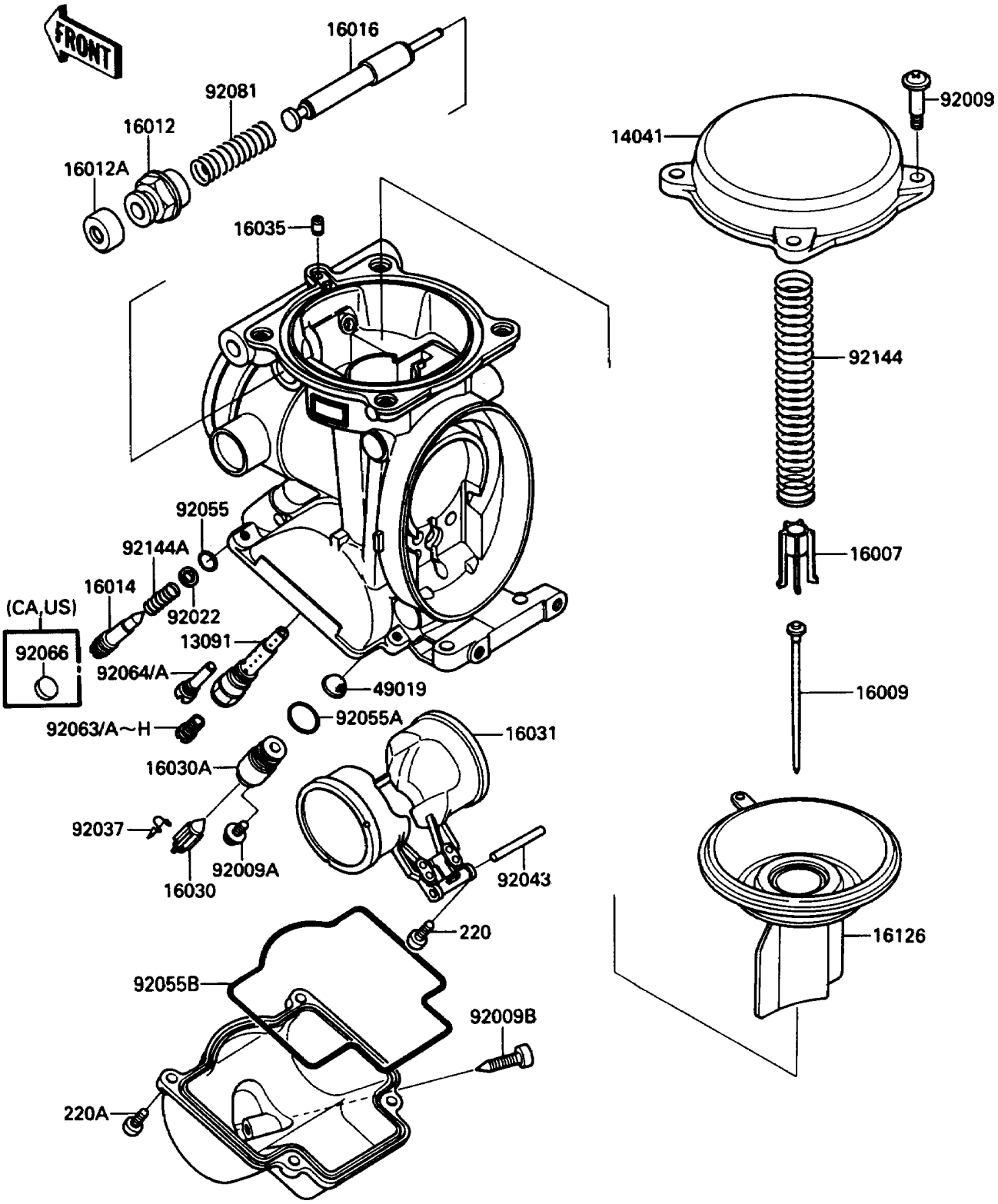

© 2026 Kawasaki Motors Corp., U.S.A.

1989 Ninja® ZX™-10 PARTS LIST

Carburetor Parts

ITEM NAME	PART NUMBER	QUANTITY
HOLDER,NEEDLE JET (Ref # 13091)	13091-1579	4
CAP-CHAMBER,MIXING (Ref # 14041)	14041-1091	4
SEAT-SPRING,VALVE (Ref # 16007)	16007-1117	4
NEEDLE-JET,N14C (Ref # 16009)	16009-1477	4
CAP-STARTER PLUNGER (Ref # 16012)	16012-1051	4
CAP-STARTER PLUNGER (Ref # 16012A)	16012-1052	4
SCREW-PILOT AIR (Ref # 16014)	16014-1064	4
PLUNGER,STARTER (Ref # 16016)	16016-1061	4
VALVE-FLOAT (Ref # 16030)	16030-1007	4
SEAT-VALVE,FLOAT (Ref # 16030A)	16030-1068	4
FLOAT (Ref # 16031)	16031-1070	4
JET-AIR,LEAK (Ref # 16035)	16035-1055	4
VALVE,VACUUM (Ref # 16126)	16126-1214	4
FILTER-FUEL,STRAINER (Ref # 49019)	49019-3707	4
SCREW,4X4.4 (Ref # 92009)	92009-1549	15
SCREW,4X8 (Ref # 92009A)	92009-1550	4
SCREW,DRAIN,M6X0.75 (Ref # 92009B)	92009-1551	4
WASHER,PLAIN (Ref # 92022)	92022-1003	4
CLAMP,FLOAT VALVE (Ref # 92037)	16044-007	4
PIN,FLOAT (Ref # 92043)	92043-1207	4
RING-O,PILOT ADJUST (Ref # 92055)	92055-1002	4
RING-O,VALVE SEAT (Ref # 92055A)	92055-1425	4
RING-O,FLOAT CHAMBER (Ref # 92055B)	92055-1426	4
JET-MAIN,#135 (Ref # 92063B)	92063-1014	4
SCREW-PAN-CROS (Ref # 220)	220D0408	4
SCREW-PAN-CROS (Ref # 220A)	220D0410	16
JET-MAIN,#132 (Ref # 92063H)	92063-1076	4
JET-PILOT,#38 (Ref # 92064A)	92064-1119	4
SPRING,STARTER PLUNGER (Ref # 92081)	92081-1761	4

© 2026 Kawasaki Motors Corp., U.S.A.

1989 Ninja® ZX™-10 PARTS LIST

Carburetor Parts

ITEM NAME	PART NUMBER	QUANTITY
SPRING,VACUUM VALVE (Ref # 92144)	92144-1219	4
SPRING,PILOT AIR SCREW (Ref # 92144A)	92144-1349	4
JET-MAIN,#140 (Ref # 92063)	92063-1013	4
JET-MAIN,#135 (Ref # 92063A)	92063-1014	4
JET-MAIN,#138 (Ref # 92063C)	92063-1015	4
JET-MAIN,2ND,#125 (Ref # 92063D)	92063-1069	4
JET-MAIN,2ND,#128 (Ref # 92063E)	92063-1074	4
JET-MAIN,#130 (Ref # 92063F)	92063-1075	4
JET-MAIN,#130 (Ref # 92063G)	92063-1075	4
JET-PILOT,#35 (Ref # 92064)	92064-1101	4
PLUG,PILOT AIR SCREW,6.9X2 (Ref # 92066)	92066-1051	4

© 2026 Kawasaki Motors Corp., U.S.A.