2010 Z750 (European) PARTS DIAGRAM

Oil Pump

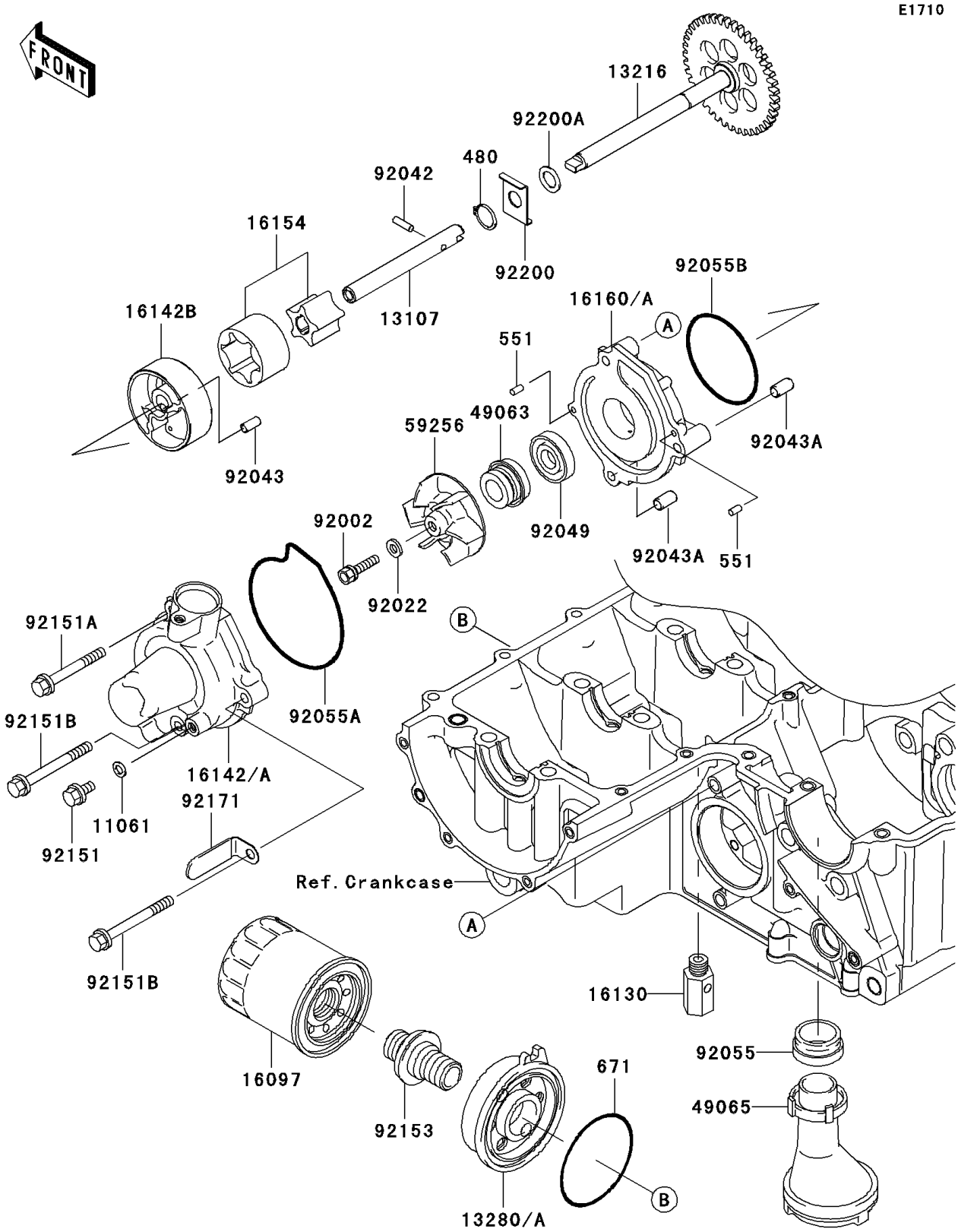

© 2024 Kawasaki Motors Corp., U.S.A.

2010 Z750 (European) PARTS LIST

Oil Pump

ITEM NAME	PART NUMBER	QUANTITY
CIRCLIP-TYPE-C,11MM (Ref # 480)	480J1100	1
PIN-DOWEL,4X8 (Ref # 551)	551A0408	2
O RING,65MM (Ref # 671)	671B2565	1
GASKET (Ref # 11061)	11061-0107	1
SHAFT,OIL PUMP (Ref # 13107)	13107-0046	1
GEAR-COMP,OIL PUMP,41T (Ref # 13216)	13216-0020	1
HOLDER (Ref # 13280A)	13280-0316	1
FILTER-ASSY-OIL (Ref # 16097)	16097-0004	1
VALVE-ASSY-RELIEF (Ref # 16130)	16130-1058	1
COVER-PUMP (Ref # 16142A)	16142-0054	1
COVER-PUMP,OIL (Ref # 16142B)	16142-1146	1
ROTOR-PUMP (Ref # 16154)	16154-0057	1
BODY,OIL PUMP (Ref # 16160A)	16160-0152	1
SEAL-MECHANICAL,WATER (Ref # 49063)	49063-1055	1
FILTER-OIL (Ref # 49065)	49065-1078	1
IMPELLER (Ref # 59256)	59256-1074	1
BOLT,6X22 (Ref # 92002)	92002-1154	1
WASHER,6.1X12X1 (Ref # 92022)	92022-077	1
PIN,DOWEL,4X13.8 (Ref # 92042)	92042-030	1
PIN,4.2X6X12 (Ref # 92043)	92043-1262	1
PIN,6.2X8X14 (Ref # 92043A)	92043-1263	2
SEAL-OIL,SC 11 28.55 5 (Ref # 92049)	92049-1336	1
RING-O,OIL FILTER (Ref # 92055)	92055-1503	1
RING-O,WATER PUMP COVER (Ref # 92055A)	92055-1571	1
RING-O,59.6X2.4 (Ref # 92055B)	92055-3018	1
BOLT,6X12 (Ref # 92151)	92151-1133	1
BOLT,6X50 (Ref # 92151A)	92151-1234	1
BOLT,6X60 (Ref # 92151B)	92151-1235	2
BOLT (Ref # 92153)	92153-0424	1

© 2024 Kawasaki Motors Corp., U.S.A.

2010 Z750 (European) PARTS LIST

Oil Pump

ITEM NAME	PART NUMBER	QUANTITY
CLAMP (Ref # 92171)	92171-1420	1
WASHER (Ref # 92200)	92200-0410	1
WASHER (Ref # 92200A)	92200-1009	1

© 2024 Kawasaki Motors Corp., U.S.A.