2005 Z750S PARTS DIAGRAM

Gear Change Mechanism

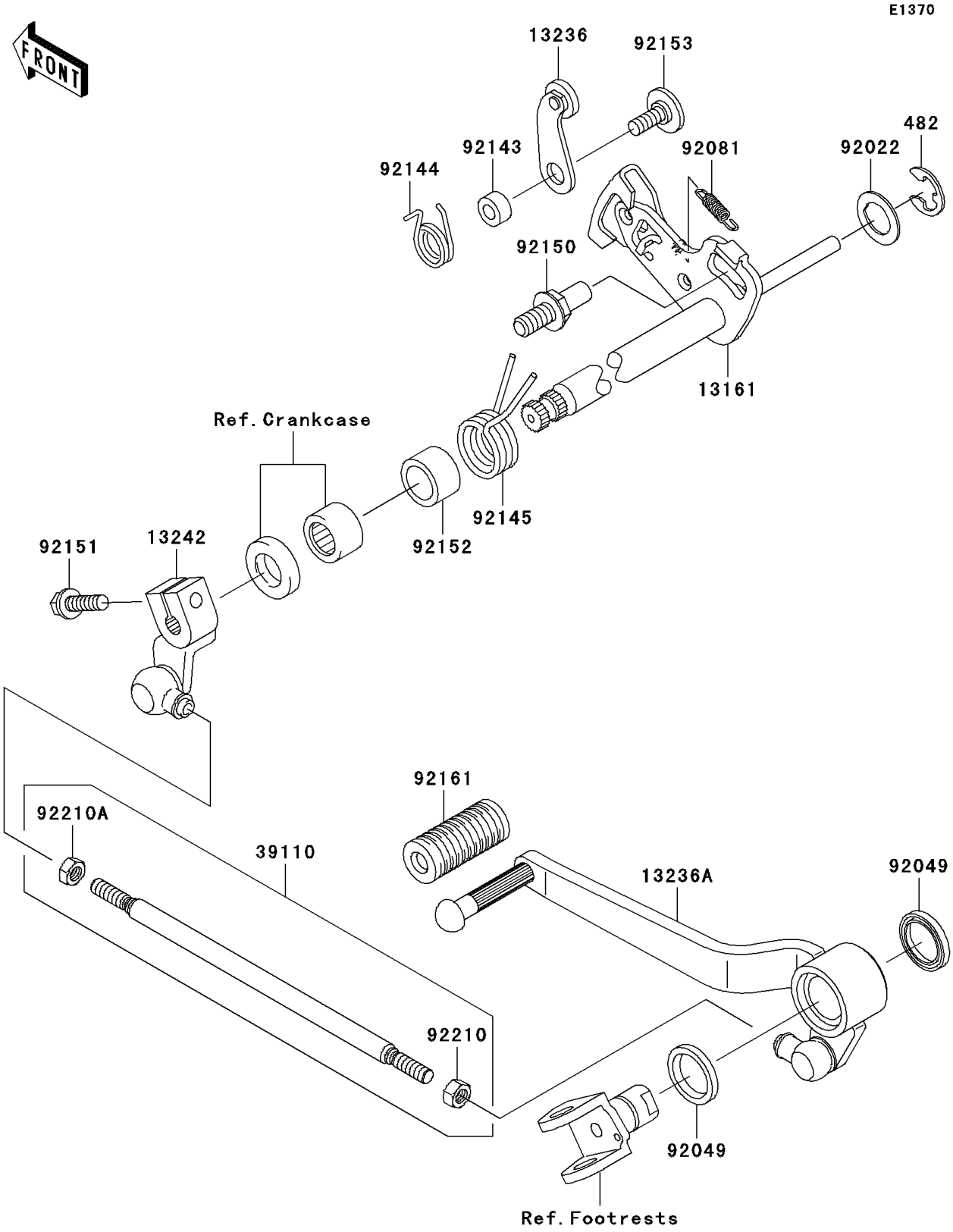

© 2024 Kawasaki Motors Corp., U.S.A.

2005 Z750S PARTS LIST

Gear Change Mechanism

ITEM NAME	PART NUMBER	QUANTITY
CIRCLIP-TYPE-E,12MM (Ref # 482)	482J0200	1
LEVER-COMP-CHANGE SHAFT (Ref # 13161)	13161-1292	1
LEVER-COMP (Ref # 13236)	13236-1243	1
LEVER-COMP,PEDAL (Ref # 13236A)	13236-1365	1
LEVER-ASSY-CHANGE (Ref # 13242)	13242-1395	1
ROD-ASSY-TIE (Ref # 39110)	39110-1131	1
WASHER,CHANGE SHAFT (Ref # 92022)	92022-1628	1
SEAL-OIL (Ref # 92049)	92049-1492	2
SPRING,PAWL RETURN (Ref # 92081)	92081-1708	1
COLLAR (Ref # 92143)	92143-1595	1
SPRING,GEAR POSITION (Ref # 92144)	92144-1857	1
SPRING (Ref # 92145)	92145-1122	1
BOLT,RETURN SPRING (Ref # 92150)	92150-1869	1
BOLT,6X20 (Ref # 92151)	92151-1226	1
COLLAR,14.2X19.9X12.0 (Ref # 92152)	92152-1383	1
BOLT,6X20 (Ref # 92153)	92153-0896	1
DAMPER,CHANGE LEVER (Ref # 92161)	92161-1300	1
NUT,6MM (Ref # 92210)	92210-1100	1
NUT,LEFT HANDED,6MM (Ref # 92210A)	92210-1101	1

© 2024 Kawasaki Motors Corp., U.S.A.