2003 ZR-7S PARTS DIAGRAM

Decals(Yellow)(H3)

F2861F

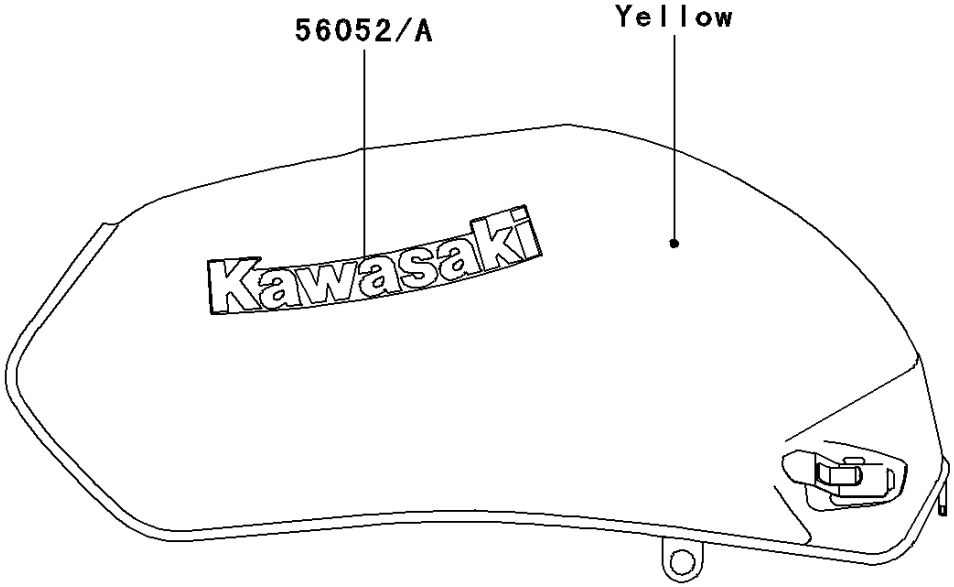

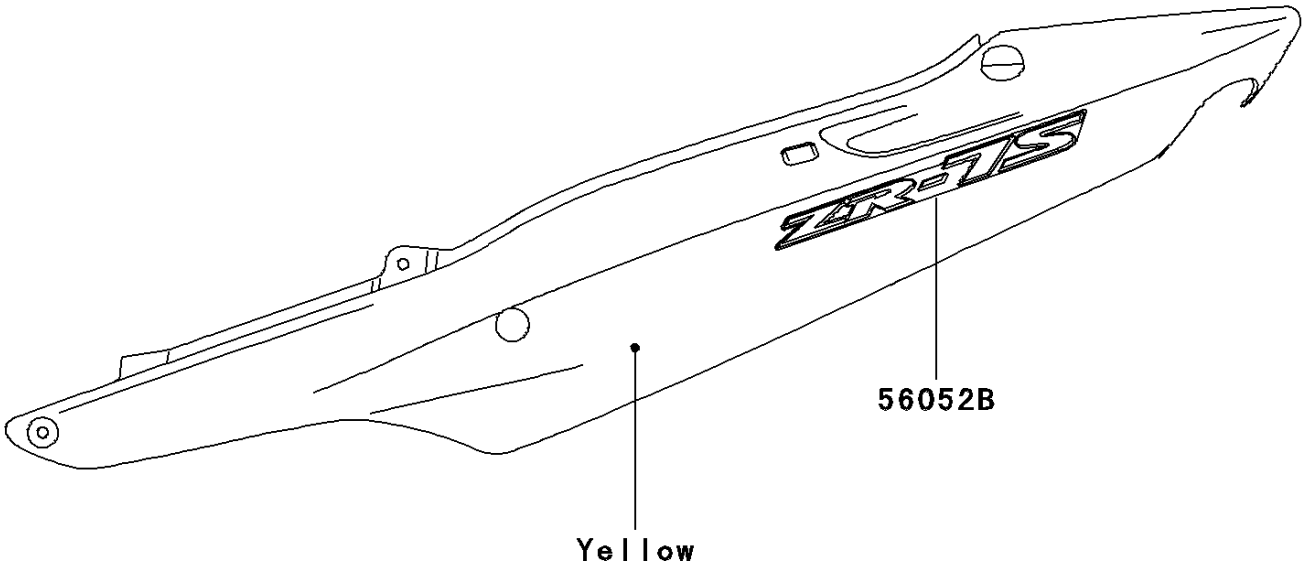

© 2025 Kawasaki Motors Corp., U.S.A.

2003 ZR-7S PARTS LIST

Decals(Yellow)(H3)

ITEM NAME	PART NUMBER	QUANTITY
MARK,FUEL TANK,LH,KAWASAKI (Ref # 56052)	56052-1767	1
MARK,FUEL TANK,RH,KAWASAKI (Ref # 56052A)	56052-1768	1
MARK,SEAT COVER,ZR-7S (Ref # 56052B)	56052-1769	2

© 2025 Kawasaki Motors Corp., U.S.A.